Stelrad®

The Radiator Book

Stelrad®

Leading the way

You probably know that Stelrad is the brand behind the UK's best selling and most popular radiator ranges. With nationwide availability from stock, models to perfectly suit any domestic or commercial application and a reputation for reliability and service.
But now we'd like to introduce you to some of the other ideas and innovations we've introduced - with great new designs, styles and technological advances, making Stelrad even more of a flexible choice for you. Think radiators, think Stelrad - every time.

Stelrad

Leading the market with a comprehensive range of unbeatable quality radiators

CONTENTS

			Technical Information
Best Sellers	Elite	6	44-48
	Compact Range	7-9	49-56
	STR	10	57-58
	Towel Rail Range	11	59-60
	Caliente Towel Rail Range	12-13	61-62
	Concord Towel Rail	14	63
	Esprit	15	64-65
	Softline	16	66-70
Designer	Compact with Style Range	18-19	73-79
	Planar Range	20-21	80-86
	Concord Range	22-23	87-95
	Classic Column Range	24-25	96-99
	Swing	26	100-101
	Caliente	27	102-104
	Excel	28	105
	Arc	29	106
	Wave	29	106
	Vistaline	30	107
	Ellipse	31	108
	Optia	32	109
Energy Saving	Radical	34	110-126
Safety	LST Standard	36	129-132
	LST Plus Vertical	37	133-134
	LST Plus	38	135-140
	LST i Plus	39	141-144
	LST Range Components		145
Technical Information	Introduction		40-41
	Accessories		42
	Best Sellers		43-70
	Designer		71-109
	Energy Saving		110-126
	Safety		127-145
Colour Options		146-147	
Glossary		148-149	

BEST SELLERS

Stelrad radiators are the ‘go to’ choice for almost every application. With hundreds of models and sizes to select from, and instant availability from stock nationwide, Stelrad has become the best selling choice for fitters and specifiers - reliable, efficient, easy to install and providing a great heating performance.

A choice of functional but stylish towel rails, and the elegant contours of our Softline radiators, complement the ever popular Compact and Elite ranges.

Elite

Best Sellers

Outstanding choice, versatility, quality and performance make Stelrad Elite the UK's most popular radiator - the perfect solution when maximum heat output is needed from a steel panel radiator. The Elite range is readily available nationwide.

	183 models
Heights:	300mm to 700mm
Lengths:	400mm to 3000mm
Outputs:	190 to 6033 watts, 650 to 20585 Btu/hr
Types:	P1, K1, P+ & K2

BIM

10 TEN YEAR WARRANTY

For full details please refer to pages 44-48

Compact Range

Horizontal

The Compact is the UK's best selling and most comprehensive range of compact radiators. They're proven, high performance winners - ideal for every room and every application where space is at a premium.

Best Sellers

	200 horizontal models
Heights:	300mm to 700mm
Lengths:	400mm to 3000mm
Outputs:	190 to 5883 watts, 647 to 20073 Btu/hr
Types:	P1, K1, P+ & K2

For full details please refer to pages 49-56

BIM

10 TEN YEAR WARRANTY

Compact Range

K3

Best Sellers

The Compact K3 is the ideal choice for low energy systems, providing outstanding heat output from a smaller footprint.

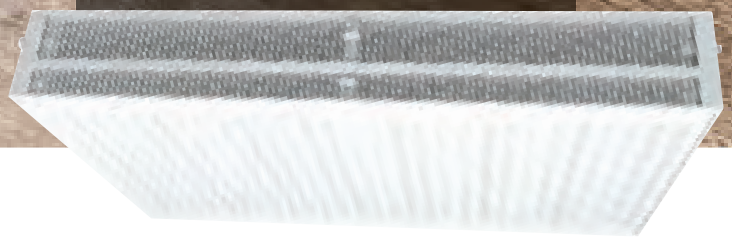

BIM

10 TEN YEAR WARRANTY

	40 K3 models
Heights:	300mm to 700mm
Lengths:	400mm to 2400mm
Outputs:	956 to 5734 watts, 3262 to 19564 Btu/hr
Type:	K3

For full details please refer to pages 49-56

Compact Range

Vertex

The Compact Vertex is a stylish, attractive radiator for applications where space is at a premium. The Compact Vertex is designed to complement the Stelrad Compact range

Best Sellers

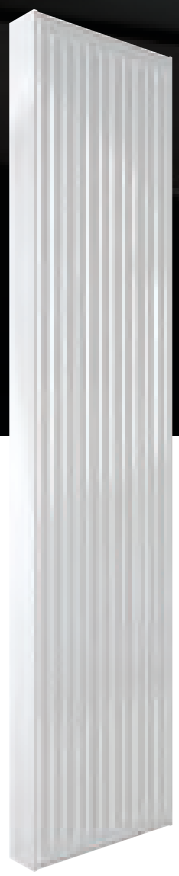

	21 vertex models
Heights:	1800mm, 2000mm & 2200mm
Lengths:	300mm to 700mm
Outputs:	1146 to 3003 watts, 3910 to 10246 Btu/hr
Types:	P2 & K2

For full details please refer to pages 49-56

BIM

5 FIVE YEAR WARRANTY

STR

Best Sellers

This simple design is the ultimate in neat, efficient functionality for towel warming and space heating. The superbly integrated unit allows towels and clothes to warm without interfering with the vital flow of convected room heat.

	5 models
Heights:	645mm & 745mm
Lengths:	425mm & 625mm
Outputs:	419 to 922 watts, 1430 to 3147 Btu/hr
Type:	K1

10 TEN YEAR WARRANTY

For full details please refer to pages 57-58

Towel Rail Range

Stelrad Towel Rails offer stylish looks and effective heating and drying performance - in the bathroom or in the kitchen. Available from stock in white or chrome.

Best Sellers

	26 models
Heights:	678mm to 1744mm
Lengths:	400mm, 500mm & 600mm
Outputs:	240 to 1022 watts, 820 to 3489 Btu/hr
Types:	Straight, curved, white or chrome

For full details please refer to pages 59-60

BIM

5 FIVE YEAR WARRANTY

Caliente Range

Straight Towel Rails

Best Sellers

Elegant tube on tube design consisting of a tight array of slim tubes makes the Caliente Towel Rail an easy choice for any bathroom or kitchen whether it's a modern, contemporary or period interior.

Double

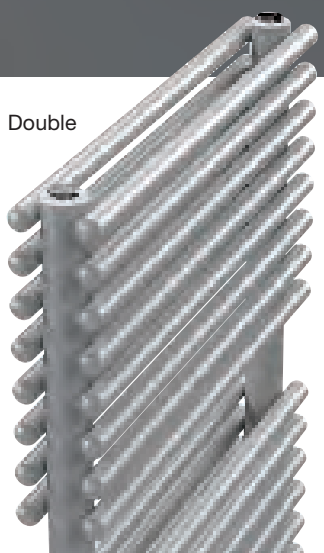

Single

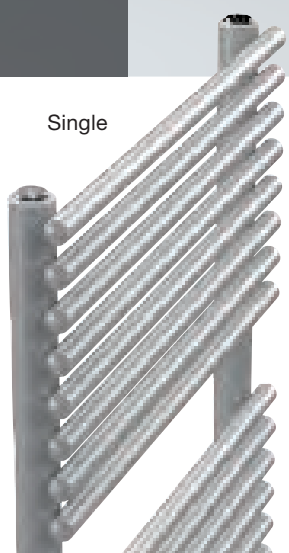

BIM

5 FIVE YEAR WARRANTY

	32 straight models (single & double rail)
Heights:	755mm to 2013mm
Lengths:	450mm to 750mm
Outputs:	389 to 2321 watts, 1327 to 7919 Btu/hr

For full details please refer to pages 61-62

For colour options please refer to page 146

Caliente Range

New Curved Towel Rail

The stylish Caliente Curved Towel Rail will complement your bathroom or en-suite whatever your décor.

Best Sellers

Colour shown is ML130 Blue Grey

	6 curved models
Heights:	1199mm, 1791mm & 2013mm
Lengths:	496mm & 595mm
Outputs:	675 to 1294 watts, 2303 to 4415 Btu/hr

BIM

5 FIVE YEAR WARRANTY

For full details please refer to pages 61-62

For colour options please refer to page 146

Concord Towel Rail

Best Sellers

The Concord Towel Rail offers a stunning alternative to tubular towel rails. Offering visual appeal combined with advanced technology, the Concord Towel Rail provides a contemporary solution for a wide range of building applications.

Colour shown is NT160 Pebble Grey

	8 models
Heights:	730mm to 1770mm
Lengths:	450mm & 600mm
Outputs:	342 to 1010 watts, 1167 to 3446 Btu/hr

BIM

5 FIVE YEAR WARRANTY

For full details please refer to page 63

For colour options please refer to page 146

Esprit

Elegant and ultra slim, Esprit is a beautifully stylish range of radiators that's great for space saving - and it looks simply stunning.

Best Sellers

	16 models
Heights:	900mm to 1800mm
Lengths:	450mm & 550mm
Outputs:	316 to 1056 watts, 1078 to 3604 Btu/hr
Types:	Straight, curved, white or chrome

For full details please refer to pages 64-65

BIM

5 FIVE YEAR WARRANTY

Softline

Best Sellers

Compact and with a beautifully curved top grille and end panels, the designer looks of the Softline range give you extra choice and flexibility for domestic and commercial applications.

	102 models
Heights:	300mm to 700mm
Lengths:	400mm to 2000mm
Outputs:	255 to 3922 watts, 870 to 13382 Btu/hr
Types:	K1, P+ and K2

BIM

15 FIFTEEN YEAR WARRANTY

For full details please refer to pages 66-70

DESIGNER

With a brilliant blend of form and function, Stelrad's range of super-stylish radiators give you extensive options to express and complement any design concept. Subtle, striking, classic or contemporary - there are hundreds of models to choose from, in all sorts of shapes, sizes and colours, to suit any living space.

Radiators which can become a design feature, or a discreet addition to any room - whatever effect you're looking for, Stelrad help you achieve it, and all with great heating performance too.

Compact with Style Range

Horizontal & Lo-Line

Designer

The subtle architectural look and feel of the Compact with Style is combined with value, range and availability to give you sophisticated designer styling for any room, commercial or domestic, at affordable prices.

Horizontal

Lo-Line

BIM

5 FIVE YEAR WARRANTY

	52 horizontal models	12 Lo-Line models
Heights:	200mm to 600mm	200mm
Lengths:	400mm to 2000mm	500mm to 2000mm
Outputs:	235 to 3202 watts, 802 to 10925 Btu/hr	125 to 966 watts, 425 to 3296 Btu/hr
Types:	K1, P+ & K2	K1, P+ & K2

For full details please refer to pages 73-79

For colour options please refer to page 146

Compact with Style Range

Vertical

Designer

	24 vertical models
Heights:	1600mm to 2200mm
Lengths:	300mm to 700mm
Outputs:	693 to 2772 watts, 2365 to 9458 Btu/hr
Types:	P2 & K2

For full details please refer to pages 73-79

BIM

5 FIVE YEAR WARRANTY

Planar Range

Horizontal

Designer

Simple and understated design makes Planar the ultimate in minimalism for radiators. With its completely flat, smooth finish and integrated top grille and side panels it has a remarkably slim and stylish profile that will enhance any space.

BIM

5 FIVE YEAR WARRANTY

	100 horizontal models
Heights:	300mm to 700mm
Lengths:	400mm to 3000mm
Outputs:	235 to 4901 watts, 802 to 16729 Btu/hr
Types:	K1 & K2

For full details please refer to pages 80-86

For colour options please refer to page 146

Planar Range

Vertical

Designer

	12 vertical models
Heights:	1800mm, 2000mm & 2200mm
Lengths:	400mm to 700mm
Outputs:	1476 to 2961 watts, 5036 to 10103 Btu/hr
Types:	K2

For full details please refer to pages 80-86

BIM

5 FIVE YEAR WARRANTY

Concord Range

Designer

Concord creates a distinctive look for any room, with four super-stylish design options - from the Lo-Line at just 144mm high to the Vertical at up to 2 metres, and every height in between. Flexible, highly efficient and very, very good looking.

Vertical

Slimline

BIM

5 FIVE YEAR WARRANTY

	Choice of 4 different radiator options
1. Concord Vertical:	6 models, 2 heights and 3 lengths
2. Concord Slimline:	8 models, 2 heights and 4 lengths
3. Concord Lo-Line:	16 models, 2 heights and 8 lengths
4. Concord Plane:	102 models, 3 heights, lengths from 500mm to 3000mm
Outputs:	382 to 6276 watts, 1303 to 21419 Btu/hr

For full details please refer to pages 87-95

For colour options please refer to page 147

Concord Range

Colour shown is RAL 1004

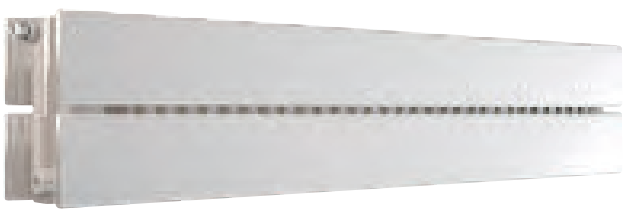

Lo-Line

Plane

Designer

Classic Column Range

Horizontal

Designer

	54 horizontal models
Heights:	300mm to 750mm
Lengths:	444mm to 1870mm
Outputs:	288 to 2972 watts, 983 to 10140 Btu/hr
Types:	2, 3 & 4 columns

BIM

5 FIVE YEAR WARRANTY

For full details please refer to pages 96-99

For colour options please refer to page 147

Classic Column Range

Vertical

A timeless classic design, to complement both contemporary and traditional interiors. The Classic Column is a real style statement, with a beautiful finish and sizes to suit almost any space.

Designer

	6 vertical models
Heights:	1800mm, 2000mm & 2500mm
Lengths:	352mm & 444mm
Outputs:	868 to 1539 watts, 2962 to 5251 Btu/hr
Types:	2 column

For full details please refer to pages 96-99

For colour options please refer to page 147

BIM

5 FIVE YEAR WARRANTY

Swing

Designer

The curved cover of the Swing makes it a focal point in any room. And with a choice of 35 colours you can make a real statement.

Colour shown is A3002 Carmine Red

BIM

5 FIVE YEAR WARRANTY

	12 models
Heights:	1820mm & 2020mm
Lengths:	504mm to 727mm
Outputs:	1224 to 2376 watts, 4176 to 8107 Btu/hr
Types:	P+ & K2

For full details please refer to page 100-101

For colour options please refer to page 146

Caliente

Smart design, with slim tubes in a tight row, not only makes the Caliente range look great - it also delivers a high heat output. Available in horizontal or vertical models to add style to any interior.

Designer

	15 models
Heights:	594mm to 1800mm
Lengths:	330mm to 1400mm
Outputs:	485 to 2120 watts, 1655 to 7233 Btu/hr
Types:	Single, Double, Horizontal & Vertical

For full details please refer to pages 102-104

BIM

5 FIVE YEAR WARRANTY

Excel

Designer

Both a screen and a radiator, the Excel - which can be floor or wall mounted - is a practical and stylish design for domestic or commercial applications. Available in six models.

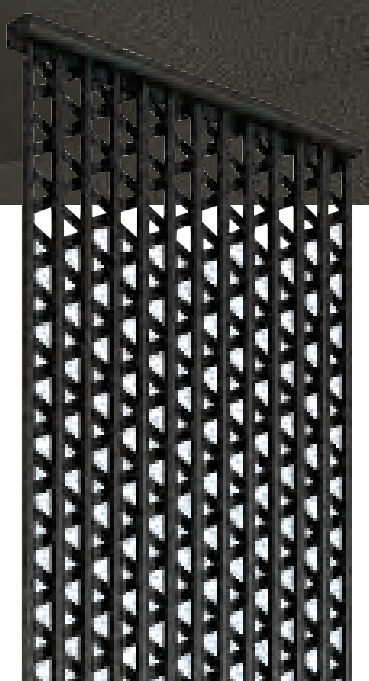

	6 models
Heights:	1800mm & 2000mm
Lengths:	380mm & 500mm
Outputs:	727 to 1048 watts, 2481 to 3577 Btu/hr
Types:	Wall & floor mounted

5 FIVE YEAR WARRANTY

For full details please refer to page 105

Arc & Wave

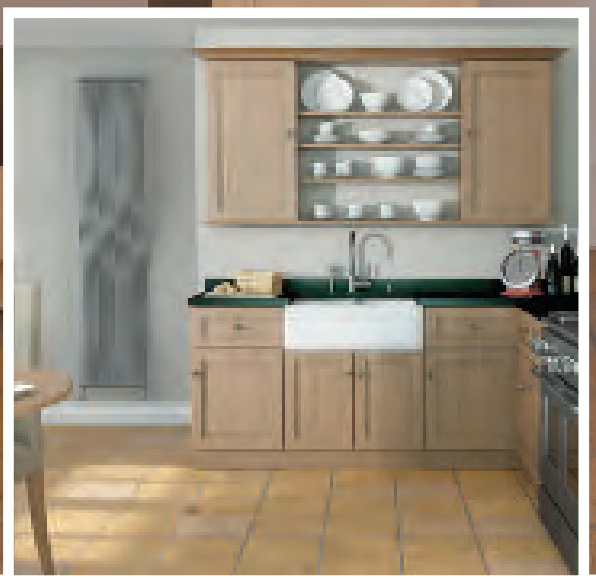

Precision curved fine tubes create the flowing, elegant form of the Arc & Wave - making them a clear style statement for any living space.

Designer

	6 models
Heights:	1800mm
Lengths:	380mm, 440mm & 620mm
Outputs:	882 to 1438 watts, 3010 to 4908 Btu/hr

For full details please refer to page 106

5 FIVE YEAR WARRANTY

Vistaline

Designer

The tightly aligned slim tubes of the Vistaline don't just look great, they also deliver a superb heating performance. Available with tubes in a single or staggered double row for maximum output flexibility, and in a wide range of colours.

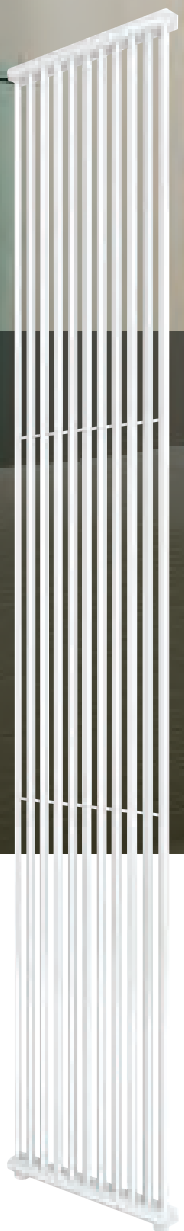

	11 models
Heights:	1800mm & 2000mm
Lengths:	320mm to 740mm
Outputs:	742 to 1886 watts, 2542 to 6437 Btu/hr
Types:	2 & 3

5 FIVE YEAR WARRANTY

For full details please refer to page 107

For colour options please refer to page 147

Ellipse

Vertical C shaped tubes in inward or outward facing columns give the Ellipse a distinctive look and make it a feature in any room. The large capacity of the tubes also delivers outstanding heating performance. Available in a wide range of colours.

Designer

	10 models
Heights:	1800mm & 2000mm
Lengths:	459mm, 689mm & 765mm
Outputs:	858 to 1590 watts, 2928 to 5427 Btu/hr
Types:	Inward or outward facing columns

For full details please refer to page 108

For colour options please refer to page 147

5 FIVE YEAR WARRANTY

Optia

Designer

Pietro Facheris' iconic design, affectionately known as 'the boat', delivers excellent heat output and cleverly integrated towel stacking spaces. Available in three lengths, and finished in cool metallic grey.

	3 models
Heights:	1800mm
Lengths:	220mm
Depths:	160mm, 200mm & 240mm
Outputs:	742 to 1114 watts, 2532 to 3802 Btu/hr

5 FIVE YEAR WARRANTY

For full details please refer to page 109

ENERGY SAVING

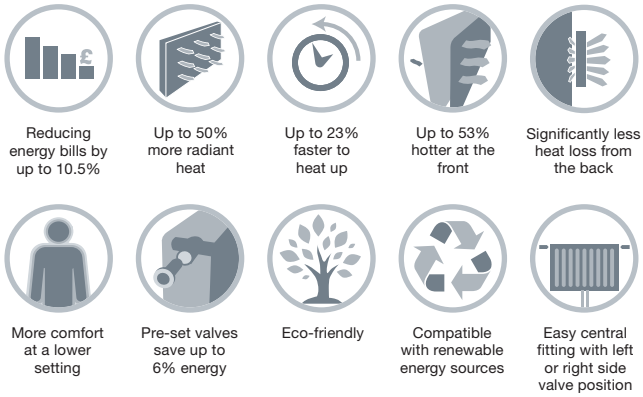

Radical thinking by Stelrad

The European Union are making energy consumption standards stricter, so here at Stelrad we believe the heating industry has a major role to play, by developing systems that work so efficiently that they produce more heat at lower temperatures.

- The power we use in buildings, accounts for 40% of global consumption
- With smarter energy management, our buildings can emit up to 60% less CO^2
- The European Union are making consumption standards stricter
- The new Stelrad Radical produces more radiant heat than traditional radiators - saving energy while raising comfort levels
- At less cost to the user and to the environment

Radical

The Radical Energy Saving Radiator can save up to 10.5% on energy bills, delivering higher comfort levels at a lower thermostat setting. That's radical thinking, from Stelrad.

Energy Saving

ENERGY SHOW 2014

WINNER 2013

GreenbuildAWARDS Winner 2013

'Retro-fit Product of the Year'

CPD

BIM

10 TEN YEAR WARRANTY

	33 models
Heights:	300mm to 600mm
Lengths:	400mm to 2000mm
Outputs:	333 to 3234 watts, 1136 to 11034 Btu/hr
Types:	K1 & K2

For full details please refer to pages 110-126

SAFETY

The Stelrad Low Surface Temperature (LST) range offers you the ideal solution for many special environments like healthcare and schools - with low surface temperatures and anti-bacterial paint so they're safe to touch.

LST Plus incorporates an integral remote sensing thermostat valve for even higher safety levels, the LST i Plus also offers this along with improved heat outputs.

Our LST Plus Vertical gives you additional design choices and flexibility.

LST Range

Standard

Stelrad's range of Low Surface Temperature radiators is the most comprehensive in the UK, with sizes and models to suit all applications. They all meet NHS Guidance for 'safe hot water and surface temperature' and are finished with anti-bacterial paint as standard, making them the No.1 choice for safety-critical environments. Installation is simple and all components are included in a single robust pack.

CPD

BIM

5 FIVE YEAR WARRANTY ON CASING

10 TEN YEAR WARRANTY ON EMITTER

	Standard 72 models
Heights:	500mm, 600mm & 800mm
Lengths:	560mm to 1960mm
Outputs:	196 to 2767 watts, 668 to 9442 Btu/hr
Types:	K1, P+ & K2

For full details please refer to pages 129-132

LST Range

Plus Vertical

	Plus Vertical 3 models
Height:	2110mm
Lengths:	560mm, 660mm & 760mm
Outputs:	1335 to 1862 watts, 4555 to 6353 Btu/hr
Type:	K2

For full details please refer to pages 133-134

CPD

BIM

5 FIVE YEAR WARRANTY ON CASING

10 TEN YEAR WARRANTY ON EMITTER

LST Range

Plus

Safety

CPD

BIM

5 FIVE YEAR WARRANTY ON CASING

10 TEN YEAR WARRANTY ON EMITTER

	Plus 72 models
Heights:	500mm, 650mm & 750mm
Lengths:	650mm to 2050mm
Outputs:	203 to 2511 watts, 692 to 8566 Btu/hr
Types:	K1, P+ & K2

For full details please refer to pages 135-140

LST Range

i Plus

Safety

i Plus 72 models	
Heights:	500mm, 650mm & 800mm
Lengths:	650mm to 2050mm
Outputs:	196 to 2767 watts, 669 to 9441 Btu/hr
Types:	K1, P+ & K2

For full details please refer to pages 141-144

CPD

BIM

5 FIVE YEAR WARRANTY ON CASING

10 TEN YEAR WARRANTY ON EMITTER

Technical information

Many technical features are constant across the Stelrad ranges, as outlined here - apart from the Radical Energy Saving Radiator, which has its own technical information pages (see page 110). Each section's introduction page provides you with any further technical information specific to the ranges included.

Extra performance to guaranteed standards

Stelrad combine the most sophisticated production resources in Europe with substantial investment in testing and verification of performance data - which has helped us create high output radiators delivering heating performance that exceeds expectation.

More choice for application flexibility

A range of models provide extra sizing flexibility and covers a multitude of application requirements, including those where there are installation difficulties or where wall space is at a premium.

Superb quality from design to installation

Our radiators are specifically designed to minimise any movement, providing a tight, professional fit, that will remain in place, even after storage, transit and installation. Convectors are precision welded directly onto the waterways for greater efficiency and economy, with flexible connection options for the highest of commercial and domestic application specifications.

Stelrad radiators are manufactured under ISO 9001 quality systems in the UK and every one comes wrapped in robust, practical packaging that will keep the product pristine, right through to installation. This clever packaging design allows installation to be completed prior to removal.

Temperature table

For systems not operating at Δt50 the factors in the table below should be applied. The output of a given radiator can be obtained by multiplying the quoted Δt50 output by the operating factor. Conversely, to derive a non Δt50 output, divide the heat output required by the relevant operation factor. This 'Δt50 equivalent output' can then be used to select a radiator from the standard tables.

°C		°F	
Δt	Operating Factor	Δt	Operating Factor
5	0.050	10	0.057
10	0.123	20	0.142
15	0.209	30	0.240
20	0.304	40	0.348
25	0.406	50	0.466
30	0.515	60	0.590
35	0.629	70	0.721
40	0.748	80	0.858
45	0.872	90	1.000
50	1.000	100	1.147
55	1.132	110	1.298
60	1.267	120	1.454
65	1.406	130	1.613
70	1.549	150	1.776
75	1.694	-	-

Example: Exact output at Δt50 = 2000 Btu/hr

Output at Δt30 = 2000 x 0.515 = 1030 Btu/hr

Testing and operating pressures

All models are high pressure tested to withstand 152.3 psi (10.5 bar). Strictly controlled independent laboratory testing ensures that all Stelrad radiators are guaranteed to perform to a maximum working pressure of 116 psi (8 bar) at a maximum temperature of 95°C. All conform to BS EN 442 - the European Standard for radiators.

Connections

Each radiator has 4 x ½" connections as standard. A ¾" valve adaptor is also available, providing a ¾" connector option to the valve without reducing performance.

(Please note: Concord and Radical have different connections. See pages 71 and 121)

Applications

Stelrad radiators are suitable for two pipe installations. For single pipe applications, it is advisable to use diversion tees in the pipework, as this will assist in obtaining design performance from the radiators. Although our radiators are suitable for Microbore pipework, the back tappings make them unsuitable for twin entry valves.

Installation

Everything required for installation can be found within each radiator's packaging. Brackets are of a strong design, with open top and deep slots, which facilitate easy and secure installation. Plastic inserts seat the radiator precisely on the bracket minimising expansion and contraction noise.

The neat nickel-plated plug and vent provide a watertight joint, whilst complementing the superior finish.

To facilitate easy one off replacement, nickel-plated brass extension pieces are also available, complete with sealing washer, in 20mm, 30mm and 40mm options. Recommended height from the floor to the base of the radiator is 150mm minimum. This allows adequate airflow when the radiator is placed on the bracket.

Caution

When designing for domestic systems we recommend that the Stelrad radiators are only used in heating systems complying with British Standard Code of Practice for Central Heating for Domestic Premises BS EN 12828:2003 and BS EN 12831:2003.

Single feed, direct cylinders are not recommended as should interchange of water occur, fresh aerated water would enter the heating system, resulting in corrosion.

Water treatment

On completion of the installation, the system should be properly flushed and filled in accordance with the British Standard Code of Practice BS 7593:2006 for the Treatment of Water in Domestic Hot Water Central Heating Systems, Part L of Building Regulations and Good Practice Guidance for Scotland.

After installation of a new Stelrad radiator the central heating system should be cleaned and flushed with cleaner to remove existing contaminants, flux residue and other installation debris which, if left, can cause damage to the new radiator. Afterwards, treat the system with an inhibitor to ensure long term protection against corrosion and limescale.

A comprehensive range of quality chemicals including inhibitors, cleaners, leak sealers and noise reducers that protect and maintain central heating systems can be obtained from:

Sentinel Performance Solutions Ltd
The Heath Business & Technical Park, Runcorn,
Cheshire WA7 4QX
Tel: 01928 588 330 (UK)
www.sentinel-solutions.net

Fernox - Cookson Electronics,
Forsyth Road, Sheerwater, Woking,
Surrey GU21 5RZ
www.fernox.com

Two coat paint process

Each Stelrad radiator is subjected to a multi stage cleaning process before the paint is applied. This involves several rinsing stages, including an iron phosphate and demineralisation rinse. The first coat of paint is applied by electrophoresis and the radiator is then stoved and cooled. The second powder coat in warm white (RAL 9016) is applied and the radiator goes through a final curing stage. It is then allowed to cool, prior to packaging.

Packaging

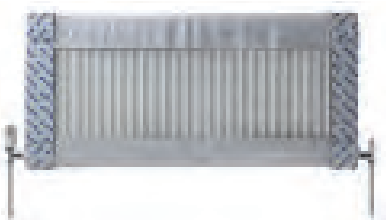

Robust packaging protects the product right through to hand over. Installation instructions can be found on the reverse of the identification label.

Example packaging only. The packaging for each radiator will vary.

Compact illustrated only

All fixing requirements are complete within the packaging. Content will vary depending on product.

STARS

STELRAD'S ADVANCED HEATLOSS CALCULATOR

The Stelrad STARS Heatloss Calculator contains an inbuilt U value calculator.

Save time and effort by using the Stelrad STARS program - the perfect solution for accurate sizing and design flexibility.

Visit www.starsapp.co.uk

Accessories

Floor mounting brackets provide a practical solution for standard and towel rail models, where situations, such as tiled walls, create installation difficulties.

Classic Column floor standing feet.

Full height and anti-lift brackets are available for a secure fixing in commercial applications.

Additional Towel Rail. 30cm, 40cm, 46cm or 62cm

For Ellipse, Esprit and Vistaline 2 (except 320 width).

Optional extension pieces for easy replacement.

Chrome robe hooks. For Vistaline, Ellipse and Esprit.

Optional ¾" inch valve adaptor for connection without performance reduction.

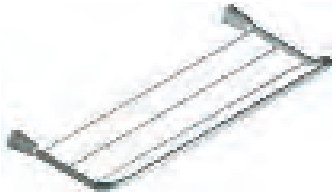

Drying & stacking rail, 55cm for Vistaline and Ellipse.

Preset key. (Radical only) Part of the hardware pack. UIN no. 9222.

Electric Heater Element Kit (Towel Rail Elements)

Part Supplied

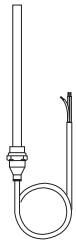

ElectricHeating Element

Optional Fittings Supplied

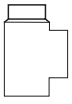

T-Piece

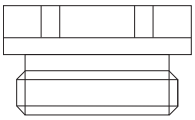

Blanking Plug

Best Sellers

Our best selling ranges make Stelrad the UK's most popular radiator brand - not just for good looks and great heating, but also for outstanding technical performance.

Elite

- The UK's most popular radiator now delivers improved outputs for exceptional heating performance
- Specifically designed accessories, such as floor standing brackets, ensure that Stelrad Elite can be fitted anywhere
- Symmetrical convectors allow radiator mounting either way up
- TBOE connection ensures greater efficiency and economy
- All tappings are perfectly aligned, with best quality nickel-plated plugs and vents, incorporating high quality EPDM 'O' rings
- High definition pressings ensure smooth edges and corners and the perfect, run free, two-coat paint finish blends with all styles of décor
- White as standard

Compact Range

- The vast and flexible Compact range now includes the new K3 three panel, three convector option
- Outstanding heat performance for smaller footprint
- Ideal for low energy systems
- White as standard

STR

- This simple design allows both towel warming and space heating
- The ultimate in neat, efficient functionality
- Allows towels and clothes to warm without interfering with the flow of convected heat
- White as standard

Towel Rails

- Range of sizes and outputs
- Towel rails offered with straight or curved rails
- Available in a white or chrome finish
- Special colour options available on request
- Electric heater kits available

Caliente Towel Rail

- Elegant tube on tube design
- Ideal for modern, contemporary or period features
- Range of sizes and outputs
- Available in straight or curved
- For colour options refer to page 146

Concord Towel Rail

- Flat rail design
- Contemporary styling
- Advanced technology
- Range of sizes and outputs
- For colour options refer to page 146

Esprit

- Slim tubes give elegance to this beautiful ultra slim radiator
- Floor or wall mounted
- Available in 16 model options
- Available in chrome, white, straight or curved

Softline

- Elegantly curved top grille and end panels
- High output radiator with heating performance which exceeds expectation
- Panels have been designed to eradicate any movement, providing a tight, professional fit
- Excellent efficiency and economical
- White as standard

To underline their all-round dependable quality and performance, the Stelrad best-selling Elite, Compact and STR come complete with a 10 year Manufacturer's Warranty.

The Stelrad Softline radiator comes with a 15 year Manufacturer's Warranty.

The Towel Rail and Esprit come complete with a 5 year Manufacturer's Warranty.

EN EURONORM 442 CE

For further information and advice call 0844 543 6200

Stelrad Elite

50 Δt (75/65/20°C)

P1 K1 P+ K2

Height	Length mm	Sections	P1 UIN	P1 Heat output Watts	P1 Heat output Btu/hr	K1 UIN	K1 Heat output Watts	K1 Heat output Btu/hr	P+ UIN	P+ Heat output Watts	P+ Heat output Btu/hr	K2 UIN	K2 Heat output Watts	K2 Heat output Btu/hr
300	500	15	-	-	-	8430	259	884	8436	388	1324	8442	506	1726
	1000	30	-	-	-	8431	517	1764	8437	776	2648	8443	1012	3453
	1500	45	-	-	-	8432	776	2648	8438	1164	3972	8444	1518	5179
	2000	60	-	-	-	8433	1034	3528	8439	1552	5295	8445	2024	6906
	2500	75	-	-	-	8434	1293	4412	8440	1940	6621	8446	2530	8632
	3000	90	-	-	-	8435	1551	5292	-	-	-	8447	3036	10359
450	400	12	8448	190	648	8461	307	1047	8479	442	1508	8497	564	1924
	500	15	8449	238	812	8462	384	1310	8480	553	1887	8498	705	2405
	600	18	8450	286	976	8463	461	1573	8481	664	2266	8499	845	2883
	700	21	8451	333	1136	8464	538	1836	8482	774	2641	8500	986	3364
	800	24	8452	381	1300	8465	614	2095	8483	885	3020	8501	1127	3845
	900	27	8453	428	1460	8466	691	2358	8484	995	3395	8502	1268	4326
	1000	30	8454	476	1624	8467	768	2620	8485	1106	3774	8503	1409	4808
	1100	33	-	-	-	8468	845	2883	8486	1217	4152	8504	1550	5289
	1200	36	8456	571	1948	8469	922	3146	8487	1327	4528	8505	1691	5770
	1400	42	8457	666	2272	8470	1075	3668	8488	1548	5282	8506	1973	6732
	1600	48	8458	762	2600	8471	1229	4193	8489	1770	6039	8507	2254	7691
	1800	54	-	-	-	8472	1382	4715	8490	1991	6793	8508	2536	8653
	2000	60	-	-	-	8473	1536	5241	8491	2212	7547	8509	2818	9615
	2200	66	-	-	-	8474	1690	5766	8492	2433	8301	8510	3100	10577
	2400	72	8460	1142	3897	8475	1843	6288	-	-	-	8511	3382	11539
	2600	78	-	-	-	8476	1997	6814	-	-	-	8512	3663	12498
	2800	84	-	-	-	8477	2150	7336	-	-	-	8513	3945	13460
	3000	90	-	-	-	8478	2304	7861	-	-	-	8514	4227	14423
600	400	12	8515	244	833	8528	400	1365	8546	564	1924	8564	711	2426
	500	15	8516	305	1041	8529	500	1706	8547	705	2405	8565	889	3033
	600	18	8517	366	1249	8530	600	2047	8548	845	2883	8566	1067	3641
	700	21	8518	427	1457	8531	700	2388	8549	986	3364	8567	1245	4248
	800	24	8519	488	1665	8532	800	2730	8550	1127	3845	8568	1422	4852
	900	27	8520	549	1873	8533	900	3071	8551	1268	4326	8569	1600	5459
	1000	30	8521	610	2081	8534	1000	3412	8552	1409	4808	8570	1778	6067
	1100	33	-	-	-	8535	1100	3753	8553	1550	5289	8571	1956	6674
	1200	36	8523	732	2498	8536	1200	4094	8554	1691	5770	8572	2134	7281
	1400	42	8524	854	2914	8537	1400	4777	8555	1973	6732	8573	2489	8492
	1600	48	8525	976	3330	8538	1600	5459	8556	2254	7691	8574	2845	9707
	1800	54	-	-	-	8539	1800	6142	8557	2536	8653	8575	3200	10918
	2000	60	8526	1220	4163	8540	2000	6824	8558	2818	9615	8576	3556	12133
	2200	66	-	-	-	8541	2200	7509	-	-	-	8577	3912	13348
	2400	72	8527	1464	4995	8542	2400	8189	8560	3382	11539	8578	4267	14559
	2600	78	-	-	-	8543	2600	8871	-	-	-	8579	4623	15774
	2800	84	-	-	-	8544	2800	9554	-	-	-	8580	4978	16985
	3000	90	-	-	-	8545	3000	10239	-	-	-	8581	5334	18200
700	400	12	-	-	-	8595	457	1559	8613	639	2180	8631	804	2743
	500	15	-	-	-	8596	571	1948	8614	799	2726	8632	1006	3432
	600	18	-	-	-	8597	685	2337	8615	958	3269	8633	1207	4118
	700	21	-	-	-	8598	799	2726	8616	1118	3815	8634	1408	4804
	800	24	-	-	-	8599	914	3119	8617	1278	4361	8635	1609	5490
	900	27	-	-	-	8600	1028	3508	8618	1437	4903	8636	1810	6176
	1000	30	-	-	-	8601	1142	3897	8619	1597	5449	8637	2011	6862
	1100	33	-	-	-	8602	1256	4285	8620	1757	5995	8638	2212	7547
	1200	36	-	-	-	8603	1370	4674	8621	1916	6537	8639	2413	8233
	1400	42	-	-	-	8604	1599	5456	8622	2236	7629	8640	2815	9605
	1600	48	-	-	-	8605	1827	6234	8623	2555	8718	8641	3218	10980
	1800	54	-	-	-	8606	2056	7015	8624	2875	9810	8642	3620	12351
	2000	60	-	-	-	8607	2284	7793	-	-	-	8643	4022	13727
	2200	66	-	-	-	8608	2512	8571	-	-	-	8644	4424	15099
	2400	72	-	-	-	8609	2741	9352	-	-	-	8645	4826	16471
	2600	78	-	-	-	8610	2969	10130	-	-	-	8646	5229	17847
	2800	84	-	-	-	8611	3198	10912	-	-	-	8647	5631	19219
	3000	90	-	-	-	8612	3426	11690	-	-	-	8648	6033	20591

Δt50 is the UK's industry standard for heating outputs, which has an operating temperature of 75/65/20°C if you have a low temperature heat source you may wish to consider Δt40 or Δt30 output (see your installer or system designer).

Stelrad Elite

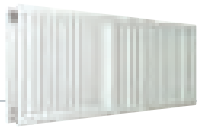

40 Δt (65/55/20°C)

P1 K1 P+ K2

Height	Length mm	Sections	P1 UIN	P1 Watts	P1 Btu/hr	K1 UIN	K1 Watts	K1 Btu/hr	P+ UIN	P+ Watts	P+ Btu/hr	K2 UIN	K2 Watts	K2 Btu/hr
300	500	15	-	-	-	8430	194	661	8436	290	990	8442	378	1291
	1000	30	-	-	-	8431	387	1319	8437	580	1980	8443	757	2583
	1500	45	-	-	-	8432	580	1980	8438	871	2971	8444	1135	3874
	2000	60	-	-	-	8433	773	2639	8439	1161	3961	8445	1514	5166
	2500	75	-	-	-	8434	967	3300	8440	1451	4951	8446	1892	6457
	3000	90	-	-	-	8435	1160	3958	-	-	-	8447	2271	7748
450	400	12	8448	142	485	8461	230	784	8479	331	1128	8497	422	1439
	500	15	8449	178	607	8462	287	980	8480	414	1411	8498	527	1799
	600	18	8450	214	730	8463	345	1177	8481	497	1695	8499	632	2157
	700	21	8451	249	850	8464	402	1373	8482	579	1975	8500	738	2516
	800	24	8452	285	972	8465	459	1567	8483	662	2259	8501	843	2876
	900	27	8453	320	1092	8466	517	1764	8484	744	2539	8502	948	3236
	1000	30	8454	356	1215	8467	574	1960	8485	827	2823	8503	1054	3596
	1100	33	-	-	-	8468	632	2157	8486	910	3106	8504	1159	3956
	1200	36	8456	427	1457	8469	690	2353	8487	993	3387	8505	1265	4316
	1400	42	8457	498	1700	8470	804	2744	8488	1158	3951	8506	1476	5035
	1600	48	8458	570	1945	8471	919	3137	8489	1324	4517	8507	1686	5753
	1800	54	-	-	-	8472	1034	3527	8490	1489	5081	8508	1897	6472
	2000	60	-	-	-	8473	1149	3920	8491	1655	5645	8509	2108	7192
	2200	66	-	-	-	8474	1264	4313	8492	1820	6209	8510	2319	7912
	2400	72	8460	854	2915	8475	1379	4704	-	-	-	8511	2530	8631
	2600	78	-	-	-	8476	1494	5097	-	-	-	8512	2740	9349
	2800	84	-	-	-	8477	1608	5487	-	-	-	8513	2951	10068
	3000	90	-	-	-	8478	1723	5880	-	-	-	8514	3162	10788
600	400	12	8515	183	623	8528	299	1021	8546	422	1439	8564	532	1815
	500	15	8516	228	778	8529	374	1276	8547	527	1799	8565	665	2269
	600	18	8517	274	934	8530	449	1531	8548	632	2157	8566	798	2723
	700	21	8518	319	1090	8531	524	1787	8549	738	2516	8567	931	3177
	800	24	8519	365	1245	8532	598	2042	8550	843	2876	8568	1064	3629
	900	27	8520	411	1401	8533	673	2297	8551	948	3236	8569	1197	4083
	1000	30	8521	456	1557	8534	748	2552	8552	1054	3596	8570	1330	4538
	1100	33	-	-	-	8535	823	2807	8553	1159	3956	8571	1463	4992
	1200	36	8523	548	1868	8536	898	3063	8554	1265	4316	8572	1596	5446
	1400	42	8524	639	2180	8537	1047	3573	8555	1476	5035	8573	1862	6352
	1600	48	8525	730	2491	8538	1197	4083	8556	1686	5753	8574	2128	7261
	1800	54	-	-	-	8539	1346	4594	8557	1897	6472	8575	2394	8167
	2000	60	8526	913	3114	8540	1496	5104	8558	2108	7192	8576	2660	9076
	2200	66	-	-	-	8541	1646	5615	-	-	-	8577	2926	9984
	2400	72	8527	1095	3736	8542	1795	6125	8560	2530	8631	8578	3192	10890
	2600	78	-	-	-	8543	1945	6636	-	-	-	8579	3458	11799
	2800	84	-	-	-	8544	2094	7146	-	-	-	8580	3724	12705
	3000	90	-	-	-	8545	2244	7657	-	-	-	8581	3990	13613
700	400	12	-	-	-	8595	342	1166	8613	478	1631	8631	601	2052
	500	15	-	-	-	8596	427	1457	8614	598	2039	8632	752	2567
	600	18	-	-	-	8597	512	1748	8615	717	2445	8633	903	3080
	700	21	-	-	-	8598	598	2039	8616	836	2853	8634	1053	3593
	800	24	-	-	-	8599	684	2333	8617	956	3262	8635	1204	4106
	900	27	-	-	-	8600	769	2624	8618	1075	3667	8636	1354	4619
	1000	30	-	-	-	8601	854	2915	8619	1195	4076	8637	1504	5132
	1100	33	-	-	-	8602	939	3206	8620	1314	4484	8638	1655	5645
	1200	36	-	-	-	8603	1025	3496	8621	1433	4890	8639	1805	6158
	1400	42	-	-	-	8604	1196	4081	8622	1673	5707	8640	2106	7184
	1600	48	-	-	-	8605	1367	4663	8623	1911	6521	8641	2407	8213
	1800	54	-	-	-	8606	1538	5247	8624	2151	7338	8642	2708	9239
	2000	60	-	-	-	8607	1708	5829	-	-	-	8643	3008	10265
	2200	66	-	-	-	8608	1879	6411	-	-	-	8644	3309	11291
	2400	72	-	-	-	8609	2050	6996	-	-	-	8645	3610	12317
	2600	78	-	-	-	8610	2221	7577	-	-	-	8646	3911	13345
	2800	84	-	-	-	8611	2392	8162	-	-	-	8647	4212	14371
	3000	90	-	-	-	8612	2563	8744	-	-	-	8648	4513	15397

Stelrad Elite

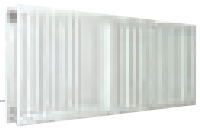

30 Δt (55/45/20°C)

P1 K1 P+ K2

Height	Length mm	Sections	P1 Heat output UIN	P1 Watts	P1 Btu/hr	K1 UIN	K1 Watts	K1 Btu/hr	P+ UIN	P+ Watts	P+ Btu/hr	K2 UIN	K2 Watts	K2 Btu/hr
300	500	15	-	-	-	8430	133	455	8436	200	682	8442	261	889
	1000	30	-	-	-	8431	266	908	8437	400	1364	8443	521	1778
	1500	45	-	-	-	8432	400	1364	8438	599	2045	8444	782	2667
	2000	60	-	-	-	8433	533	1817	8439	799	2727	8445	1042	3557
	2500	75	-	-	-	8434	666	2272	8440	999	3409	8446	1303	4446
	3000	90	-	-	-	8435	799	2725	-	-	-	8447	1564	5335
450	400	12	8448	98	334	8461	158	539	8479	228	777	8497	290	991
	500	15	8449	123	418	8462	198	675	8480	285	972	8498	363	1239
	600	18	8450	147	503	8463	237	810	8481	342	1167	8499	435	1485
	700	21	8451	171	585	8464	277	945	8482	399	1360	8500	508	1733
	800	24	8452	196	669	8465	316	1079	8483	456	1555	8501	580	1980
	900	27	8453	220	752	8466	356	1214	8484	512	1748	8502	653	2228
	1000	30	8454	245	836	8467	396	1350	8485	570	1943	8503	726	2476
	1100	33	-	-	-	8468	435	1485	8486	627	2138	8504	798	2724
	1200	36	8456	294	1003	8469	475	1620	8487	683	2332	8505	871	2971
	1400	42	8457	343	1170	8470	554	1889	8488	797	2720	8506	1016	3467
	1600	48	8458	392	1339	8471	633	2160	8489	912	3110	8507	1161	3961
	1800	54	-	-	-	8472	712	2428	8490	1025	3499	8508	1306	4456
	2000	60	-	-	-	8473	791	2699	8491	1139	3887	8509	1451	4952
	2200	66	-	-	-	8474	870	2970	8492	1253	4275	8510	1597	5447
	2400	72	8460	588	2007	8475	949	3238	-	-	-	8511	1742	5943
	2600	78	-	-	-	8476	1028	3509	-	-	-	8512	1886	6437
	2800	84	-	-	-	8477	1107	3778	-	-	-	8513	2032	6932
	3000	90	-	-	-	8478	1187	4049	-	-	-	8514	2177	7428
600	400	12	8515	126	429	8528	206	703	8546	290	991	8564	366	1249
	500	15	8516	157	536	8529	258	879	8547	363	1239	8565	458	1562
	600	18	8517	188	643	8530	309	1054	8548	435	1485	8566	550	1875
	700	21	8518	220	750	8531	361	1230	8549	508	1733	8567	641	2188
	800	24	8519	251	858	8532	412	1406	8550	580	1980	8568	732	2499
	900	27	8520	283	965	8533	464	1581	8551	653	2228	8569	824	2811
	1000	30	8521	314	1072	8534	515	1757	8552	726	2476	8570	916	3124
	1100	33	-	-	-	8535	567	1933	8553	798	2724	8571	1007	3437
	1200	36	8523	377	1286	8536	618	2109	8554	871	2971	8572	1099	3750
	1400	42	8524	440	1501	8537	721	2460	8555	1016	3467	8573	1282	4374
	1600	48	8525	503	1715	8538	824	2811	8556	1161	3961	8574	1465	4999
	1800	54	-	-	-	8539	927	3163	8557	1306	4456	8575	1648	5623
	2000	60	8526	628	2144	8540	1030	3514	8558	1451	4952	8576	1831	6249
	2200	66	-	-	-	8541	1133	3866	-	-	-	8577	2015	6874
	2400	72	8527	754	2573	8542	1236	4217	8560	1742	5943	8578	2198	7498
	2600	78	-	-	-	8543	1339	4569	-	-	-	8579	2381	8123
	2800	84	-	-	-	8544	1442	4920	-	-	-	8580	2564	8747
	3000	90	-	-	-	8545	1545	5272	-	-	-	8581	2747	9373
700	400	12	-	-	-	8595	235	803	8613	329	1123	8631	414	1413
	500	15	-	-	-	8596	294	1003	8614	411	1404	8632	518	1768
	600	18	-	-	-	8597	353	1204	8615	493	1683	8633	622	2121
	700	21	-	-	-	8598	411	1404	8616	576	1965	8634	725	2474
	800	24	-	-	-	8599	471	1606	8617	658	2246	8635	829	2827
	900	27	-	-	-	8600	529	1806	8618	740	2525	8636	932	3180
	1000	30	-	-	-	8601	588	2007	8619	822	2806	8637	1036	3534
	1100	33	-	-	-	8602	647	2207	8620	905	3087	8638	1139	3887
	1200	36	-	-	-	8603	706	2407	8621	987	3367	8639	1243	4240
	1400	42	-	-	-	8604	823	2810	8622	1152	3929	8640	1450	4946
	1600	48	-	-	-	8605	941	3210	8623	1316	4490	8641	1657	5655
	1800	54	-	-	-	8606	1059	3613	8624	1481	5052	8642	1864	6361
	2000	60	-	-	-	8607	1176	4013	-	-	-	8643	2071	7067
	2200	66	-	-	-	8608	1294	4414	-	-	-	8644	2278	7774
	2400	72	-	-	-	8609	1412	4816	-	-	-	8645	2485	8480
	2600	78	-	-	-	8610	1529	5217	-	-	-	8646	2693	9188
	2800	84	-	-	-	8611	1647	5619	-	-	-	8647	2900	9895
	3000	90	-	-	-	8612	1764	6020	-	-	-	8648	3107	10601

EN 442 Certification Data – CETIAT tested in accordance with BS EN 442

Type	P1		K1				P+				K2			
Height	450	600	300	450	600	700	300	450	600	700	300	450	600	700
W/m at 75/65/20	476	610	517	768	1000	1142	776	1106	1409	1597	1012	1409	1778	2011
n-coefficients	1.30	1.31	1.31	1.30	1.29	1.29	1.33	1.33	1.33	1.34	1.33	1.33	1.23	1.34
Heated Surface Area (m^2/m)	1.03	1.37	2.09	3.37	4.66	5.51	2.44	3.84	5.24	6.18	3.51	5.62	7.74	9.15
Weight (kg/m)	9.25	12.33	8.38	13.34	18.30	21.33	13.71	21.31	28.90	33.50	15.90	24.80	33.70	39.13
Water Contents (l/m)	2.57	3.25	1.89	2.57	3.25	3.77	3.70	5.15	6.60	7.63	3.70	5.15	6.60	7.63
Wall to tap centre (mm)	46	46	51	51	51	51	62	62	62	62	73	73	73	73

Elite mounting brackets

All dimensions in mm. Inches in brackets.

Floor mounting brackets available.
See page 42.

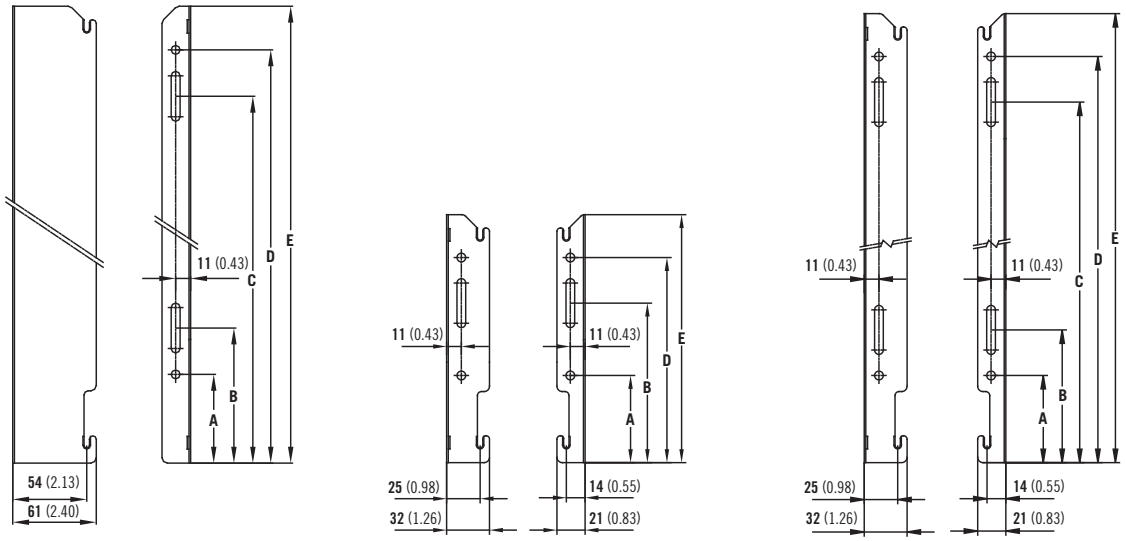

P1 | K1, P+ and K2 (300mm) | K1, P+ and K2 (Over 300mm)

Dimensions	mm	in	mm	in	mm	in	mm	in
Rad height	300	11.81	450	17.72	600	23.62	700	27.56
A	65	2.56	65	2.56	65	2.56	65	2.56
B	119	4.69	99	3.90	99	3.90	99	3.90
C	-	-	269	10.59	419	16.50	519	20.43
D	153	6.02	303	11.93	453	17.83	553	21.77
E	185	7.28	335	13.19	485	19.09	585	23.03

K1, P+, K2 and P1 lug positions

All dimensions in mm. Inches in brackets.

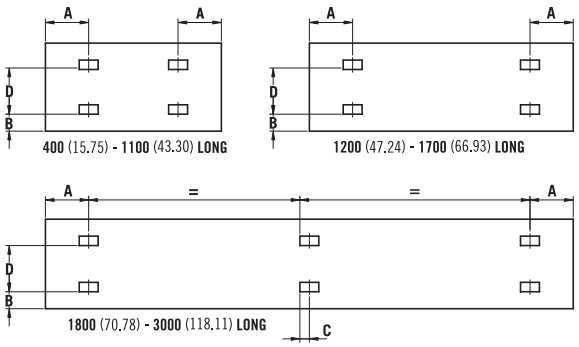

P1, P+ & K2

Dimensions	mm	in
A	133	5.24
B	60	2.36

Panel Height		D	
mm	in	mm	in
300	11.81	155	6.10
450	17.72	305	12.01
600	23.62	455	17.91
700	27.56	555	21.95

K1

Dimensions		mm	in
A	400mm	117	4.61
A	500 - 3000mm	150	5.91
B	400 - 3000mm	60	2.36
C	1800 - 3000mm	17	0.67

Pressure drops

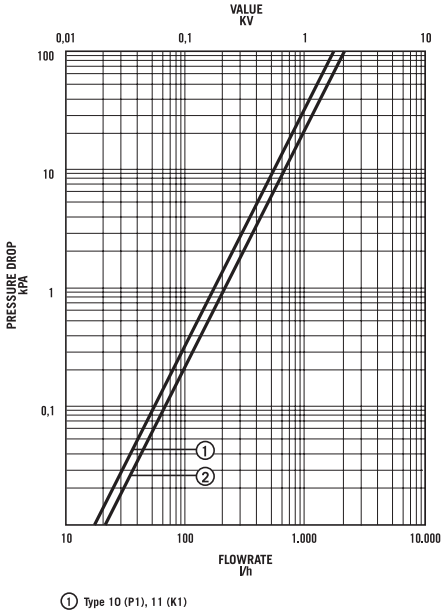

① Type 10 (P1), 11 (K1)
② Type 21 (P+), 22 (K2)

Elite wall mounting information

All dimensions in mm. Inches in brackets.

K1

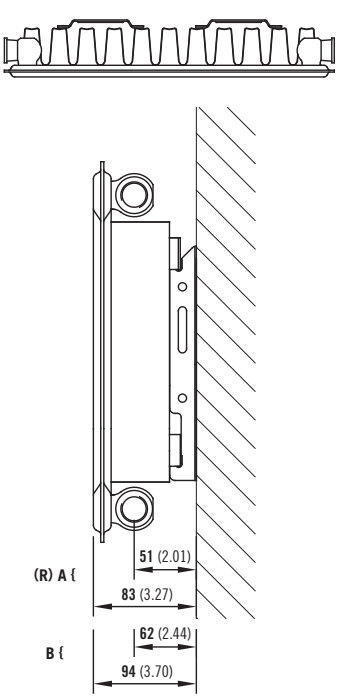

P+

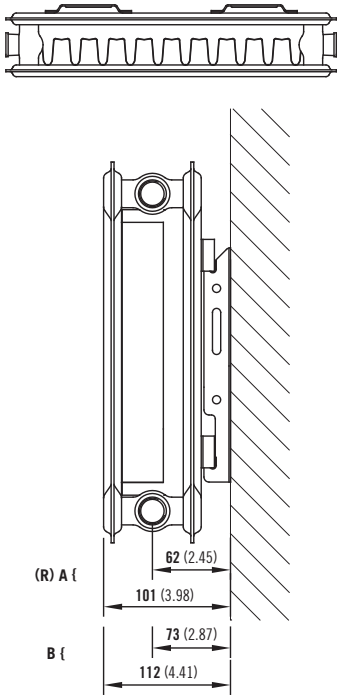

K2

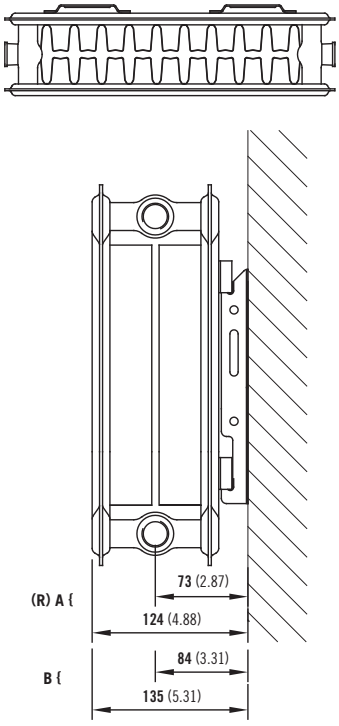

P1

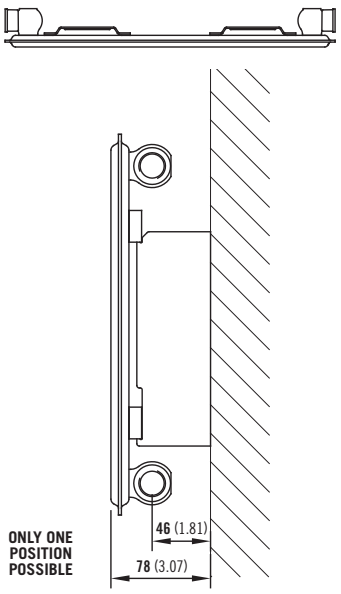

Elite piping options

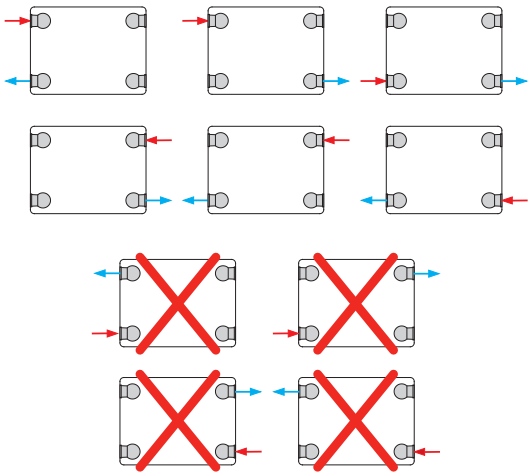

Elite bracket position

A = Closest to Wall B = Furthest from Wall

(R) = Recommended Mounting Position

Stelrad Compact Range

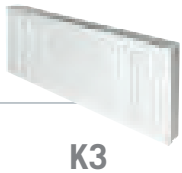

50 Δt (75/65/20°C)

Height	Length mm	Sections	P1			K1			P+			K2			K3		
			UIN	Heat output Watt	Btu/hr	UIN	Heat output Watt	Btu/hr	UIN	Heat output Watt	Btu/hr	UIN	Heat output Watt	Btu/hr	UIN	Heat output Watt	Btu/hr
300	500	15	-	-	-	143650	255	870	143656	373	1273	143662	491	1675	-	-	-
	1000	30	-	-	-	143651	509	1737	143657	745	2542	143663	982	3351	3033310	1349	4603
	1500	45	-	-	-	143652	764	2607	143658	1118	3815	143664	1473	5026	-	-	-
	2000	60	-	-	-	143653	1018	3473	143659	1490	5084	143665	1964	6701	3033320	2698	9206
	2500	75	-	-	-	143654	1273	4343	143660	1863	6357	143666	2455	8376	-	-	-
	3000	90	-	-	-	143655	1527	5210	143661	2235	7626	143667	2946	10052	-	-	-
450	400	12	143668	190	648	143680	302	1030	143698	422	1440	143716	548	1870	-	-	-
	500	15	143669	237	809	143681	378	1290	143699	528	1802	143717	686	2341	-	-	-
	600	18	-	-	-	143682	454	1549	143700	633	2160	143718	823	2808	-	-	-
	700	21	143671	332	1133	143683	529	1805	143701	739	2521	143719	960	3276	-	-	-
	800	24	-	-	-	143684	605	2064	143702	844	2880	143720	1097	3743	-	-	-
	900	27	-	-	-	143685	680	2320	143703	950	3241	143721	1234	4210	-	-	-
	1000	30	143674	474	1617	143686	756	2579	143704	1055	3600	143722	1371	4678	-	-	-
	1100	33	-	-	-	143687	832	2839	143705	1161	3961	143723	1508	5145	-	-	-
	1200	36	143675	569	1941	143688	907	3095	143706	1266	4320	143724	1645	5613	-	-	-
	1400	42	-	-	-	143689	1058	3610	143707	1477	5040	143725	1919	6548	-	-	-
	1600	48	-	-	-	143690	1210	4129	143708	1688	5759	143726	2194	7486	-	-	-
	1800	54	-	-	-	143691	1361	4644	143709	1899	6479	143727	2468	8421	-	-	-
	2000	60	-	-	-	143692	1512	5159	143710	2110	7199	143728	2742	9356	-	-	-
	2200	66	-	-	-	143693	1663	5674	143711	2321	7919	143729	3016	10291	-	-	-
	2400	72	-	-	-	143694	1814	6189	143712	2532	8639	143730	3290	11225	-	-	-
	2600	78	-	-	-	143695	1966	6708	143713	2743	9359	143731	3565	12164	-	-	-
	2800	84	-	-	-	143696	2117	7223	143714	2954	10079	143732	3839	13099	-	-	-
	3000	90	-	-	-	143697	2268	7738	143715	3165	10799	143733	4113	14034	-	-	-
500	600	18	-	-	-	-	-	-	-	-	-	-	-	-	3053306	1234	4210
	700	21	-	-	-	-	-	-	-	-	-	-	-	-	3053307	1439	4910
	800	24	-	-	-	-	-	-	-	-	-	-	-	-	3053308	1645	5613
	900	27	-	-	-	-	-	-	-	-	-	-	-	-	3053309	1850	6312
	1000	30	-	-	-	-	-	-	-	-	-	-	-	-	3053310	2056	7015
	1100	33	-	-	-	-	-	-	-	-	-	-	-	-	3053311	2262	7718
	1200	36	-	-	-	-	-	-	-	-	-	-	-	-	3053312	2467	8417
	1400	42	-	-	-	-	-	-	-	-	-	-	-	-	3053314	2878	9820
	1600	48	-	-	-	-	-	-	-	-	-	-	-	-	3053316	3290	11225
	1800	54	-	-	-	-	-	-	-	-	-	-	-	-	3053318	3701	12628
	2000	60	-	-	-	-	-	-	-	-	-	-	-	-	3053320	4112	14030
	2400	72	-	-	-	-	-	-	-	-	-	-	-	-	3053324	4934	16835
600	400	12	143734	248	846	143746	392	1338	143764	538	1836	143782	693	2365	3063304	956	3262
	500	15	-	-	-	143747	490	1672	143765	673	2296	143783	866	2955	3063305	1195	4077
	600	18	-	-	-	143748	588	2006	143766	807	2753	143784	1039	3545	3063306	1433	4889
	700	21	143737	433	1477	143749	686	2341	143767	942	3214	143785	1212	4135	3063307	1672	5705
	800	24	143738	495	1689	143750	784	2675	143768	1076	3671	143786	1386	4729	3063308	1911	6520
	900	27	-	-	-	143751	882	3009	143769	1211	4132	143787	1559	5319	3063309	2150	7336
	1000	30	143740	619	2112	143752	980	3344	143770	1345	4589	143788	1732	5910	3063310	2389	8151
	1100	33	-	-	-	143753	1078	3678	143771	1480	5050	143789	1905	6500	3063311	2628	8967
	1200	36	-	-	-	143754	1176	4013	143772	1614	5507	143790	2078	7090	3063312	2867	9782
	1400	42	-	-	-	143755	1372	4681	143773	1883	6425	143791	2425	8274	3063314	3345	11413
	1600	48	143743	990	3378	143756	1568	5350	143774	2152	7343	143792	2771	9455	3063316	3822	13041
	1800	54	-	-	-	143757	1764	6019	143775	2421	8260	143793	3118	10639	3063318	4300	14672
	2000	60	-	-	-	143758	1960	6688	143776	2690	9178	143794	3464	11819	3063320	4778	16303
	2200	66	-	-	-	143759	2156	7356	143777	2959	10096	143795	3810	13000	-	-	-
	2400	72	-	-	-	143760	2352	8025	143778	3228	11014	143796	4157	14184	3063324	5734	19564
	2600	78	-	-	-	143761	2548	8694	143779	3497	11932	143797	4503	15364	-	-	-
	2800	84	-	-	-	143762	2744	9363	143780	3766	12850	143798	4850	16548	-	-	-
	3000	90	-	-	-	143763	2940	10031	143781	4035	13767	143799	5196	17729	-	-	-
700	400	12	-	-	-	143812	447	1525	143830	612	2088	143848	784	2675	-	-	-
	500	15	-	-	-	143813	559	1907	143831	765	2610	143849	981	3347	3073305	1356	4627
	600	18	-	-	-	143814	670	2286	143832	918	3132	143850	1177	4016	3073306	1627	5551
	700	21	-	-	-	143815	782	2668	143833	1071	3654	143851	1373	4685	3073307	1898	6476
	800	24	-	-	-	143816	894	3050	143834	1224	4176	143852	1569	5353	3073308	2170	7404
	900	27	-	-	-	143817	1005	3429	143835	1377	4698	143853	1765	6022	3073309	2441	8329
	1000	30	-	-	-	143818	1117	3811	143836	1530	5220	143854	1961	6691	3073310	2712	9253
	1100	33	-	-	-	143819	1229	4193	143837	1683	5742	143855	2157	7360	3073311	2983	10178
	1200	36	-	-	-	143820	1340	4572	143838	1836	6264	143856	2353	8028	3073312	3254	11103
	1400	42	-	-	-	143821	1564	5336	143839	2142	7309	143857	2745	9366	3073314	3797	12955
	1600	48	-	-	-	143822	1787	6097	143840	2448	8353	143858	3138	10707	3073316	4339	14805
	1800	54	-	-	-	143823	2011	6862	143841	2754	9397	143859	3530	12044	3073318	4882	16657
	2000	60	-	-	-	143824	2234	7622	143842	3060	10441	143860	3922	13382	3073320	5424	18507
	2200	66	-	-	-	143825	2457	8383	143843	3366	11485	143861	4314	14719	-	-	-
	2400	72	-	-	-	143826	2681	9148	143844	3672	12529	143862	4706	16057	-	-	-
	2600	78	-	-	-	143827	2904	9908	143845	3978	13573	143863	5099	17398	-	-	-
	2800	84	-	-	-	143828	3128	10673	143846	4284	14617	143864	5491	18735	-	-	-
	3000	90	-	-	-	143829	3351	11434	143847	4590	15661	143865	5883	20073	-	-	-

Δt50 is the UK's industry standard for heating outputs, which has an operating temperature of 75/65/20°C if you have a low temperature heat source you may wish to consider Δt40 or Δt30 output (see your installer or system designer).

Stelrad Compact Range

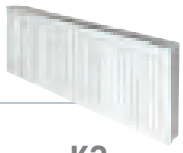

40 Δt (65/55/20°C)

Height	Length mm	Sections	P1 UIN	P1 Heat output Watt	P1 Heat output Btu/hr	K1 UIN	K1 Heat output Watt	K1 Heat output Btu/hr	P+ UIN	P+ Heat output Watt	P+ Heat output Btu/hr	K2 UIN	K2 Heat output Watt	K2 Heat output Btu/hr	K3 UIN	K3 Heat output Watt	K3 Heat output Btu/hr
300	500	15	-	-	-	143650	191	651	143656	279	952	143662	367	1253	-	-	-
	1000	30	-	-	-	143651	381	1299	143657	557	1901	143663	735	2506	3033310	1009	3443
	1500	45	-	-	-	143652	571	1950	143658	836	2853	143664	1102	3759	-	-	-
	2000	60	-	-	-	143653	761	2598	143659	1115	3803	143665	1469	5012	3033320	2018	6886
	2500	75	-	-	-	143654	952	3249	143660	1394	4755	143666	1836	6266	-	-	-
	3000	90	-	-	-	143655	1142	3897	143661	1672	5704	143667	2204	7519	-	-	-
450	400	12	143668	142	485	143680	226	771	143698	316	1077	143716	410	1399	-	-	-
	500	15	143669	177	605	143681	283	965	143699	395	1348	143717	513	1751	-	-	-
	600	18	-	-	-	143682	340	1159	143700	473	1616	143718	616	2100	-	-	-
	700	21	143671	248	847	143683	396	1350	143701	553	1886	143719	718	2450	-	-	-
	800	24	-	-	-	143684	453	1544	143702	631	2154	143720	821	2800	-	-	-
	900	27	-	-	-	143685	509	1735	143703	711	2425	143721	923	3149	-	-	-
	1000	30	143674	355	1210	143686	565	1929	143704	789	2693	143722	1026	3499	-	-	-
	1100	33		-	-	143687	622	2123	143705	868	2963	143723	1128	3849	-	-	-
	1200	36	143675	426	1452	143688	678	2315	143706	947	3231	143724	1230	4198	-	-	-
	1400	42	-	-	-	143689	791	2700	143707	1105	3770	143725	1435	4898	-	-	-
	1600	48	-	-	-	143690	905	3088	143708	1263	4308	143726	1641	5599	-	-	-
	1800	54	-	-	-	143691	1018	3474	143709	1420	4847	143727	1846	6299	-	-	-
	2000	60	-	-	-	143692	1131	3859	143710	1578	5385	143728	2051	6998	-	-	-
	2200	66	-	-	-	143693	1244	4244	143711	1736	5924	143729	2256	7697	-	-	-
	2400	72	-	-	-	143694	1357	4630	143712	1894	6462	143730	2461	8397	-	-	-
	2600	78	-	-	-	143695	1471	5018	143713	2052	7001	143731	2667	9099	-	-	-
	2800	84	-	-	-	143696	1584	5403	143714	2210	7539	143732	2872	9798	-	-	-
	3000	90	-	-	-	143697	1696	5788	143715	2367	8078	143733	3077	10497	-	-	-
500	600	18	-	-	-	-	-	-	-	-	-	-	-	-	3053306	923	3149
	700	21	-	-	-	-	-	-	-	-	-	-	-	-	3053307	1076	3673
	800	24	-	-	-	-	-	-	-	-	-	-	-	-	3053308	1230	4198
	900	27	-	-	-	-	-	-	-	-	-	-	-	-	3053309	1384	4722
	1000	30	-	-	-	-	-	-	-	-	-	-	-	-	3053310	1538	5247
	1100	33	-	-	-	-	-	-	-	-	-	-	-	-	3053311	1692	5773
	1200	36	-	-	-	-	-	-	-	-	-	-	-	-	3053312	1845	6296
	1400	42	-	-	-	-	-	-	-	-	-	-	-	-	3053314	2153	7345
	1600	48	-	-	-	-	-	-	-	-	-	-	-	-	3053316	2461	8397
	1800	54	-	-	-	-	-	-	-	-	-	-	-	-	3053318	2768	9446
	2000	60	-	-	-	-	-	-	-	-	-	-	-	-	3053320	3076	10495
	2400	72	-	-	-	-	-	-	-	-	-	-	-	-	3053324	3691	12592
600	400	12	143734	186	633	143746	293	1000	143764	402	1373	143782	518	1769	3063304	715	2440
	500	15	-	-	-	143747	367	1251	143765	503	1718	143783	648	2210	3063305	894	3050
	600	18	-	-	-	143748	440	1501	143766	604	2060	143784	777	2652	3063306	1072	3657
	700	21	143737	324	1105	143749	513	1751	143767	705	2404	143785	907	3093	3063307	1251	4267
	800	24	143738	370	1263	143750	586	2001	143768	805	2746	143786	1037	3537	3063308	1429	4877
	900	27	-	-	-	143751	660	2251	143769	906	3091	143787	1166	3979	3063309	1608	5487
	1000	30	143740	463	1580	143752	733	2501	143770	1006	3433	143788	1296	4420	3063310	1787	6097
	1100	33	-	-	-	143753	806	2751	143771	1107	3777	143789	1425	4862	3063311	1966	6707
	1200	36	-	-	-	143754	880	3001	143772	1207	4119	143790	1554	5303	3063312	2145	7317
	1400	42	-	-	-	143755	1026	3502	143773	1408	4806	143791	1814	6189	3063314	2502	8537
	1600	48	143743	741	2527	143756	1173	4002	143774	1610	5492	143792	2073	7072	3063316	2859	9754
	1800	54	-	-	-	143757	1319	4502	143775	1811	6179	143793	2332	7958	3063318	3216	10974
	2000	60	-	-	-	143758	1466	5002	143776	2012	6865	143794	2591	8841	3063320	3574	12194
	2200	66	-	-	-	143759	1613	5502	143777	2213	7552	143795	2850	9724	-	-	-
	2400	72	-	-	-	143760	1759	6003	143778	2415	8238	143796	3109	10609	3063324	4289	14634
	2600	78	-	-	-	143761	1906	6503	143779	2616	8925	143797	3368	11492	-	-	-
	2800	84	-	-	-	143762	2053	7003	143780	2817	9611	143798	3628	12378	-	-	-
	3000	90	-	-	-	143763	2199	7503	143781	3018	10298	143799	3887	13261	-	-	-
700	400	12	-	-	-	143812	334	1141	143830	458	1562	143848	586	2001	-	-	-
	500	15	-	-	-	143813	418	1427	143831	572	1952	143849	734	2504	3073305	1014	3461
	600	18	-	-	-	143814	501	1710	143832	687	2343	143850	880	3004	3073306	1217	4152
	700	21	-	-	-	143815	585	1996	143833	801	2733	143851	1027	3504	3073307	1420	4844
	800	24	-	-	-	143816	669	2282	143834	916	3124	143852	1174	4004	3073308	1623	5538
	900	27	-	-	-	143817	752	2565	143835	1030	3514	143853	1320	4505	3073309	1826	6230
	1000	30	-	-	-	143818	836	2851	143836	1144	3905	143854	1467	5005	3073310	2029	6922
	1100	33	-	-	-	143819	919	3137	143837	1259	4295	143855	1613	5505	3073311	2231	7613
	1200	36	-	-	-	143820	1002	3420	143838	1373	4686	143856	1760	6005	3073312	2434	8305
	1400	42	-	-	-	143821	1170	3992	143839	1602	5467	143857	2053	7006	3073314	2840	9691
	1600	48	-	-	-	143822	1337	4561	143840	1831	6248	143858	2347	8009	3073316	3246	11074
	1800	54	-	-	-	143823	1504	5132	143841	2060	7029	143859	2640	9009	3073318	3652	12460
	2000	60	-	-	-	143824	1671	5702	143842	2289	7810	143860	2934	10010	3073320	4057	13843
	2200	66	-	-	-	143825	1838	6271	143843	2518	8591	143861	3227	11010	-	-	-
	2400	72	-	-	-	143826	2005	6842	143844	2747	9372	143862	3520	12011	-	-	-
	2600	78	-	-	-	143827	2172	7412	143845	2976	10153	143863	3814	13014	-	-	-
	2800	84	-	-	-	143828	2340	7983	143846	3204	10934	143864	4107	14014	-	-	-
	3000	90	-	-	-	143829	2507	8552	143847	3433	11714	143865	4400	15014	-	-	-

Stelrad Compact Range

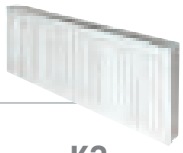

30 Δt (55/45/20°C)

Height	Length mm	Sections	P1 UIN	P1 Heat output Watt	P1 Heat output Btu/hr	K1 UIN	K1 Heat output Watt	K1 Heat output Btu/hr	P+ UIN	P+ Heat output Watt	P+ Heat output Btu/hr	K2 UIN	K2 Heat output Watt	K2 Heat output Btu/hr	K3 UIN	K3 Heat output Watt	K3 Heat output Btu/hr
300	500	15	-	-	-	143650	131	448	143656	192	655	143662	253	863	-	-	-
	1000	30	-	-	-	143651	262	894	143657	384	1309	143663	506	1726	3033310	695	2370
	1500	45	-	-	-	143652	393	1342	143658	576	1965	143664	759	2588	-	-	-
	2000	60	-	-	-	143653	524	1789	143659	767	2618	143665	1011	3451	3033320	1389	4741
	2500	75	-	-	-	143654	656	2237	143660	959	3274	143666	1264	4314	-	-	-
	3000	90	-	-	-	143655	786	2683	143661	1151	3927	143667	1517	5177	-	-	-
450	400	12	143668	98	334	143680	156	531	143698	217	742	143716	282	963	-	-	-
	500	15	143669	122	416	143681	195	664	143699	272	928	143717	353	1205	-	-	-
	600	18	-	-	-	143682	234	798	143700	326	1112	143718	424	1446	-	-	-
	700	21	143671	171	583	143683	272	930	143701	381	1299	143719	494	1687	-	-	-
	800	24	-	-	-	143684	312	1063	143702	435	1483	143720	565	1928	-	-	-
	900	27	-	-	-	143685	350	1195	143703	489	1669	143721	636	2168	-	-	-
	1000	30	143674	244	833	143686	389	1328	143704	543	1854	143722	706	2409	-	-	-
	1100	33		-	-	143687	428	1462	143705	598	2040	143723	777	2650	-	-	-
	1200	36	143675	293	1000	143688	467	1594	143706	652	2225	143724	847	2891	-	-	-
	1400	42	-	-	-	143689	545	1859	143707	761	2595	143725	988	3372	-	-	-
	1600	48	-	-	-	143690	623	2126	143708	869	2966	143726	1130	3855	-	-	-
	1800	54	-	-	-	143691	701	2392	143709	978	3337	143727	1271	4337	-	-	-
	2000	60	-	-	-	143692	779	2657	143710	1087	3708	143728	1412	4818	-	-	-
	2200	66	-	-	-	143693	856	2922	143711	1195	4078	143729	1553	5300	-	-	-
	2400	72	-	-	-	143694	934	3188	143712	1304	4449	143730	1694	5781	-	-	-
	2600	78	-	-	-	143695	1012	3455	143713	1413	4820	143731	1836	6264	-	-	-
	2800	84	-	-	-	143696	1090	3720	143714	1521	5191	143732	1977	6746	-	-	-
	3000	90	-	-	-	143697	1168	3985	143715	1630	5561	143733	2118	7227	-	-	-
500	600	18	-	-	-	-	-	-	-	-	-	-	-	-	3053306	636	2168
	700	21	-	-	-	-	-	-	-	-	-	-	-	-	3053307	741	2529
	800	24	-	-	-	-	-	-	-	-	-	-	-	-	3053308	847	2891
	900	27	-	-	-	-	-	-	-	-	-	-	-	-	3053309	953	3251
	1000	30	-	-	-	-	-	-	-	-	-	-	-	-	3053310	1059	3613
	1100	33	-	-	-	-	-	-	-	-	-	-	-	-	3053311	1165	3975
	1200	36	-	-	-	-	-	-	-	-	-	-	-	-	3053312	1271	4335
	1400	42	-	-	-	-	-	-	-	-	-	-	-	-	3053314	1482	5057
	1600	48	-	-	-	-	-	-	-	-	-	-	-	-	3053316	1694	5781
	1800	54	-	-	-	-	-	-	-	-	-	-	-	-	3053318	1906	6503
	2000	60	-	-	-	-	-	-	-	-	-	-	-	-	3053320	2118	7226
	2400	72	-	-	-	-	-	-	-	-	-	-	-	-	3053324	2541	8670
600	400	12	143734	128	436	143746	202	689	143764	277	945	143782	357	1218	3063304	492	1680
	500	15	-	-	-	143747	252	861	143765	347	1183	143783	446	1522	3063305	615	2100
	600	18	-	-	-	143748	303	1033	143766	416	1418	143784	535	1826	3063306	738	2518
	700	21	143737	223	761	143749	353	1205	143767	485	1655	143785	624	2130	3063307	861	2938
	800	24	143738	255	870	143750	404	1378	143768	554	1891	143786	714	2435	3063308	984	3358
	900	27	-	-	-	143751	454	1550	143769	624	2128	143787	803	2739	3063309	1107	3778
	1000	30	143740	319	1088	143752	505	1722	143770	693	2363	143788	892	3043	3063310	1230	4198
	1100	33		-	-	143753	555	1894	143771	762	2601	143789	981	3347	3063311	1353	4618
	1200	36	-	-	-	143754	606	2066	143772	831	2836	143790	1070	3651	3063312	1477	5038
	1400	42	-	-	-	143755	707	2411	143773	970	3309	143791	1249	4261	3063314	1723	5878
	1600	48	143743	510	1740	143756	808	2755	143774	1108	3781	143792	1427	4869	3063316	1968	6716
	1800	54	-	-	-	143757	908	3100	143775	1247	4254	143793	1606	5479	3063318	2215	7556
	2000	60	-	-	-	143758	1009	3444	143776	1385	4727	143794	1784	6087	3063320	2461	8396
	2200	66	-	-	-	143759	1110	3788	143777	1524	5199	143795	1962	6695	-	-	-
	2400	72	-	-	-	143760	1211	4133	143778	1662	5672	143796	2141	7305	3063324	2953	10076
	2600	78	-	-	-	143761	1312	4477	143779	1801	6145	143797	2319	7913	-	-	-
	2800	84	-	-	-	143762	1413	4822	143780	1939	6618	143798	2498	8522	-	-	-
	3000	90	-	-	-	143763	1514	5166	143781	2078	7090	143799	2676	9130	-	-	-
700	400	12	-	-	-	143812	230	785	143830	315	1075	143848	404	1378	-	-	-
	500	15	-	-	-	143813	288	982	143831	394	1344	143849	505	1724	3073305	698	2383
	600	18	-	-	-	143814	345	1177	143832	473	1613	143850	606	2068	3073306	838	2859
	700	21	-	-	-	143815	403	1374	143833	552	1882	143851	707	2413	3073307	977	3335
	800	24	-	-	-	143816	460	1571	143834	630	2151	143852	808	2757	3073308	1118	3813
	900	27	-	-	-	143817	518	1766	143835	709	2420	143853	909	3101	3073309	1257	4289
	1000	30	-	-	-	143818	575	1963	143836	788	2688	143854	1010	3446	3073310	1397	4765
	1100	33	-	-	-	143819	633	2160	143837	867	2957	143855	1111	3790	3073311	1536	5242
	1200	36	-	-	-	143820	690	2355	143838	946	3226	143856	1212	4135	3073312	1676	5718
	1400	42	-	-	-	143821	805	2748	143839	1103	3764	143857	1414	4823	3073314	1955	6672
	1600	48	-	-	-	143822	920	3140	143840	1261	4302	143858	1616	5514	3073316	2235	7624
	1800	54	-	-	-	143823	1036	3534	143841	1418	4839	143859	1818	6203	3073318	2514	8579
	2000	60	-	-	-	143824	1151	3926	143842	1576	5377	143860	2020	6892	3073320	2793	9531
	2200	66	-	-	-	143825	1265	4317	143843	1733	5915	143861	2222	7580	-	-	-
	2400	72	-	-	-	143826	1381	4711	143844	1891	6452	143862	2424	8269	-	-	-
	2600	78	-	-	-	143827	1496	5103	143845	2049	6990	143863	2626	8960	-	-	-
	2800	84	-	-	-	143828	1611	5496	143846	2206	7528	143864	2828	9649	-	-	-
	3000	90	-	-	-	143829	1726	5888	143847	2364	8065	143865	3030	10337	-	-	-

EN 442 Certification Data – CETIAT tested in accordance with BS EN 442

Type	P1		K1				P+				K2				K3			
Height	450	600	300	450	600	700	300	450	600	700	300	450	600	700	300	500	600	700
W/m at 75/65/20	474	619	509	756	980	1117	745	1055	1345	1530	982	1371	1732	1961	1349	2056	2389	2712
n-coefficients	1.33	1.33	1.32	1.31	1.29	1.29	1.33	1.33	1.34	1.34	1.33	1.33	1.33	1.34	1.31	1.32	1.32	1.34
Heated Surface Area (m^2/m)	1.03	1.37	2.09	3.37	4.66	5.51	2.44	3.84	5.24	6.18	3.51	5.62	7.74	9.15	5.26	9.49	11.61	13.72
Weight (kg/m)	9.82	13.00	9.31	14.51	19.70	22.90	14.29	22.04	29.80	34.50	16.80	25.90	35.00	40.53	25.20	43.40	52.50	60.77
Water Contents (l/m)	2.57	3.2	1.89	2.57	3.25	3.77	3.70	5.15	6.60	7.63	3.70	5.15	6.60	7.63	5.40	8.33	9.80	11.37
Wall to tap centre (mm)	46	46	51	51	51	51	62	62	62	62	73	73	73	73	73	73	73	73

Compact mounting brackets

All dimension in mm. Inches in brackets. Floor mounting brackets available. See page 54.

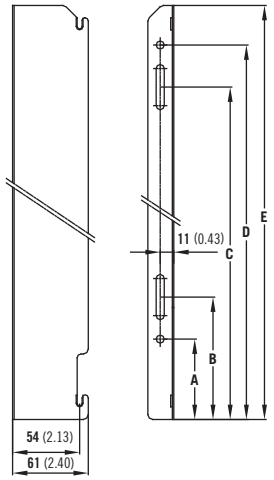

P1

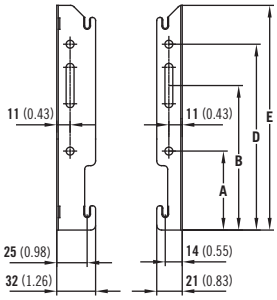

K1, P+ and K2 (300mm)

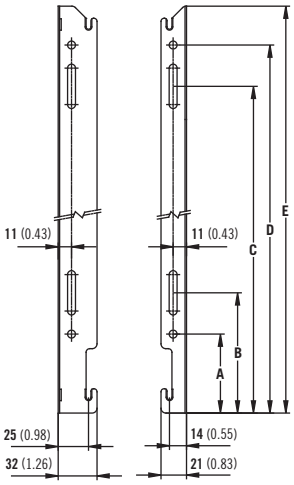

K1, P+ and K2 (Over 300mm)

Dimensions	mm	in	mm	in	mm	in	mm	in
	300	11.81	450	17.72	600	23.62	700	27.56
A	65	2.56	65	2.56	65	2.56	65	2.56
B	119	4.69	99	3.90	99	3.90	99	3.90
C	-	-	269	10.59	419	16.50	519	20.43
D	153	6.02	303	11.93	453	17.83	553	21.77
E	185	7.28	335	13.19	485	19.09	585	23.03

K1, P+, K2 and P1 lug positions

All dimensions in mm. Inches in brackets.

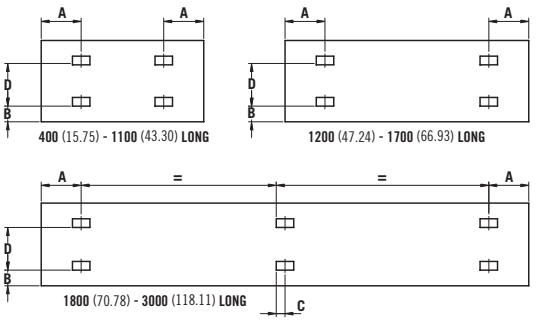

P1, P+ & K2

Dimensions	mm	in
A	133	5.24
B	60	2.36

Panel Height		D	
mm	in	mm	in
300	11.81	155	6.10
450	17.72	305	12.01
600	23.62	455	17.91
700	27.56	555	21.95

K1

Dimensions		mm	in
A	400mm	117	4.61
A	500 - 3000mm	150	5.91
B	400 - 3000mm	60	2.36
C	1800 - 3000mm	17	0.67

Pressure drops

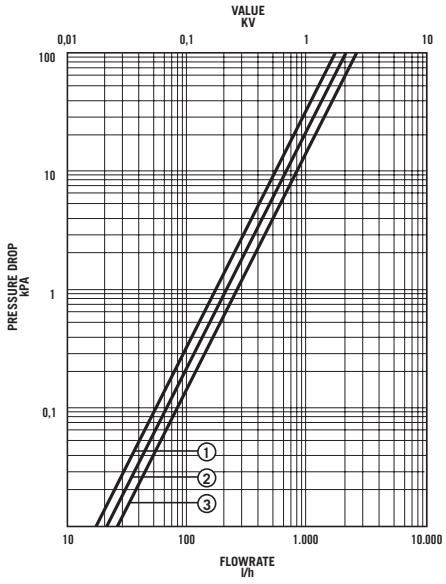

1 Type 10 (P1), 11 (K1)
2 Type 21 (P+), 22 (K2)
3 Type 33 (K3)

Compact wall mounting information

All dimensions in mm. Inches in brackets.

K1

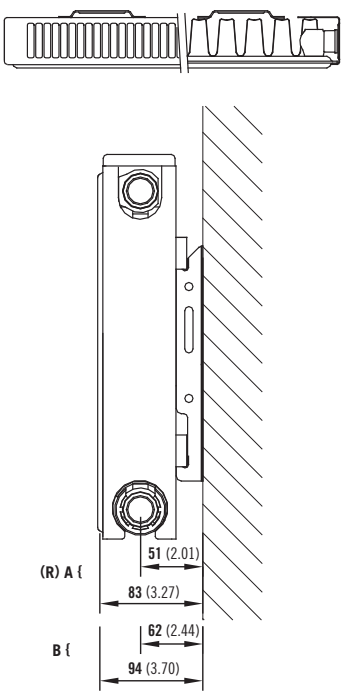

P+

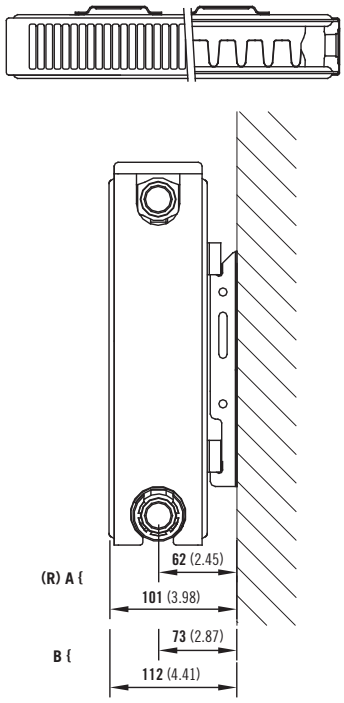

K2

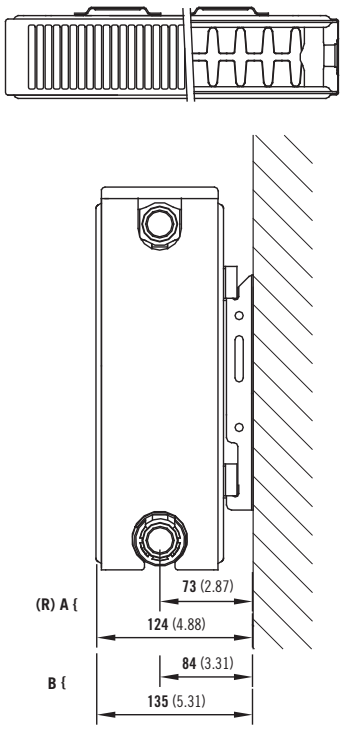

P1

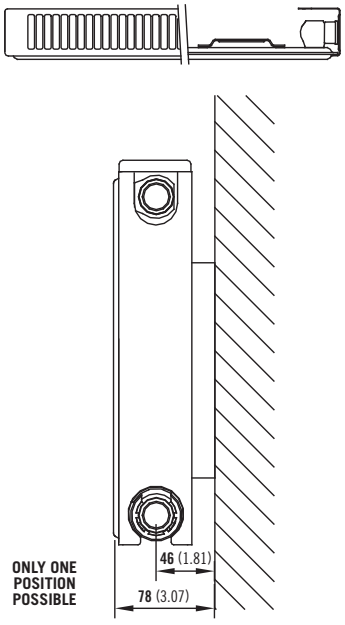

Compact piping options

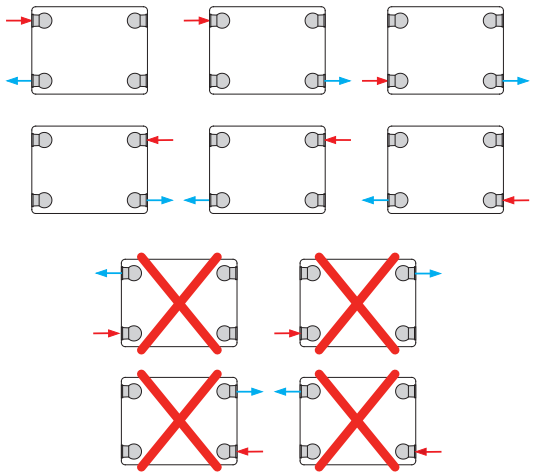

Compact bracket position

A = Closest to Wall B = Furthest from Wall (R) = Recommended Mounting Position

Compact K3 wall mounting and lug information

All dimensions in mm. Inches in brackets.

Rear elevation

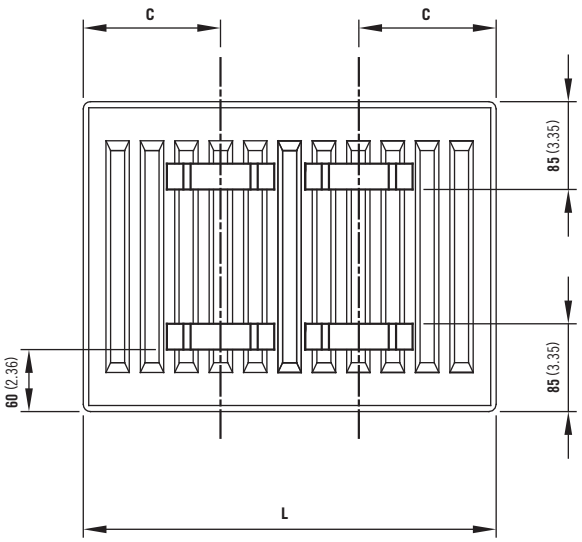

Side elevation

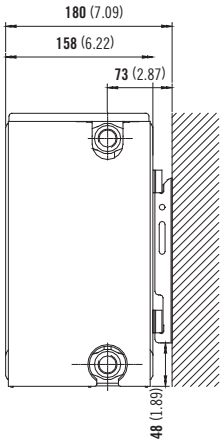

L	C
400-1100	133
1200-2400	267

Top elevation

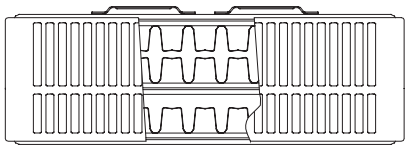

Compact K3 floorstanding brackets

All dimensions in mm. Inches in brackets.

Floorstanding brackets.

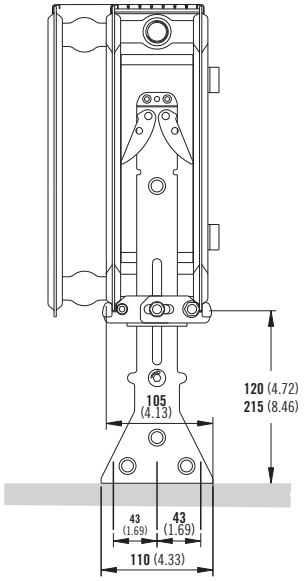

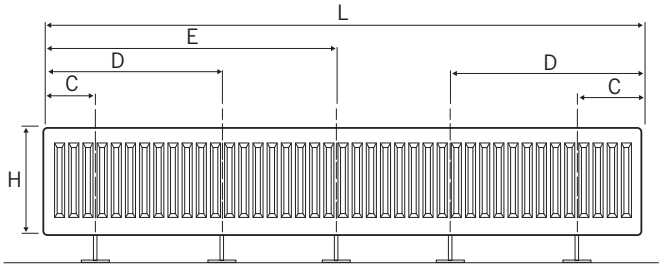

	L	400	500 - 1100	1200	1400 - 1800	2000 - 3000
H	Number	2pc				3pc
300	C	117	150	250	250	250
500	E	-	-	-	-	L/2+17

	L	400	500 - 1100	1200	1400 - 1800	2000	2200	2400	2600	2800	3000
H	Number	2pc			3pc	4pc			5pc		
600	C	117	150	250	250	250			250		
700	D	-	-	-	-	750	817	850	750	817	850
	E	-	-	-	817	-	-	-	L/2+17		

Stelrad Compact Vertex

50 Δt (75/65/20°C)

Height	Length	Sections	Heat output			Heat output		
			UIN	Watts	Btu/hr	UIN	Watts	Btu/hr
1800	400	12	148095	1146	3910	31182204	1584	5405
	500	15	-	-	-	31182205	1980	6756
	600	18	148103	1719	5865	31182206	2376	8107
	700	21	148107	2006	6844	31182207	2772	9458
2000	400	12	148096	1248	4258	31202204	1716	5855
	500	15	-	-	-	31202205	2145	7319
	600	18	148104	1872	6387	31202206	2574	8782
	700	21	148108	2184	7452	31202207	3003	10246
2200	300	9	-	-	-	31222203	1386	4729
	400	12	148097	1356	4627	31222204	1848	6305
	500	15	-	-	-	31222205	2310	7882
	600	18	148105	2034	6940	31222206	2772	9458
	700	21	148109	2373	8097	-	-	-

Δt50 is the UK's industry standard for heating outputs, which has an operating temperature of 75/65/20°C if you have a low temperature heat source you may wish to consider Δt40 or Δt30 output (see your installer or system designer).

40 Δt (65/55/20°C)

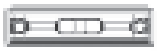

30 Δt (55/45/20°C)

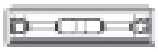

Height	Length mm	Sections	40 Δt Heat output						30 Δt Heat output					
			UIN	Watts	Btu/hr	UIN	Watts	Btu/hr	UIN	Watts	Btu/hr	UIN	Watts	Btu/hr
1800	400	12	148095	857	2925	31182204	1185	4043	148095	590	2014	31182204	816	2783
	500	15	-	-	-	31182205	1467	5004	-	-	-	31182205	1000	3412
	600	18	148103	1286	4387	31182206	1777	6064	148103	885	3020	31182206	1224	4175
	700	21	148107	1500	5119	31182207	2073	7075	148107	1033	3525	31182207	1428	4871
2000	400	12	148096	933	3185	31202204	1284	4380	148096	643	2193	31202204	884	3015
	500	15	-	-	-	31202205	1604	5474	-	-	-	31202205	1105	3769
	600	18	148104	1400	4777	31202206	1925	6569	148104	964	3289	31202206	1326	4523
	700	21	148108	1634	5574	31202207	2246	7664	148108	1125	3838	31202207	1547	5277
2200	300	9	-	-	-	31222203	1037	3537	-	-	-	31222203	714	2435
	400	12	148097	1014	3461	31222204	1382	4716	148097	698	2383	31222204	952	3247
	500	15	-	-	-	31222205	1728	5896	-	-	-	31222205	1190	4059
	600	18	148105	1521	5191	31222206	2073	7075	148105	1048	3574	31222206	1428	4871
	700	21	148109	1775	6057	-	-	-	148109	1222	4170	-	-	-

EN 442 Certification Data – CETIAT tested in accordance with BS EN 442

Type	P2			K2		
Height	1800	2000	2200	1800	2000	2200
W/m at 75/65/20	2865	3120	3390	3690	3960	4230
n-coefficients	1.31	1.30	1.30	1.33	1.33	1.33
Heated Surface Area (m^2/m)	8.20	9.10	10.10	29.90	37.74	38.66
Weight (kg/m)	71.10	78.60	87.60	105.30	116.40	126.60
Water Contents (l/m)	16.20	18.00	20.10	15.90	17.70	20.10
Wall to tap centre (mm)	65	65	65	65	65	65

Compact Vertex mounting brackets

Height		H2		H3		H4	
mm	in	mm	in	mm	in	mm	in
1800	70.87	70	2.75	830	43.89	1590	63.58
2000	78.74	70	2.75	930	47.83	1790	71.46
2200	86.61	70	2.75	1030	51.77	1990	79.33

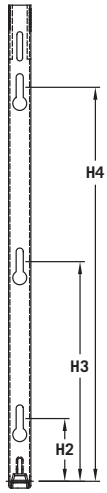

Compact Vertex wall mounting information

All dimensions in mm. Inches in brackets.

P2

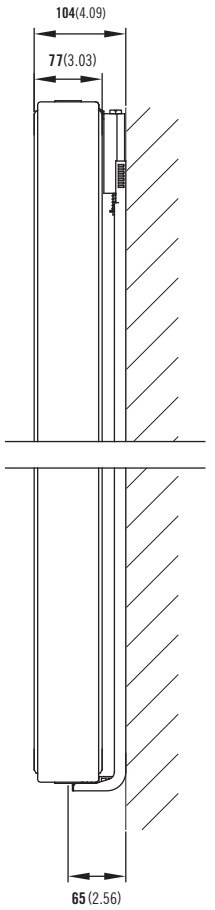

K2

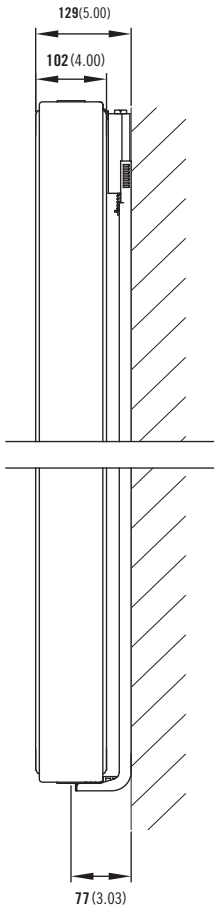

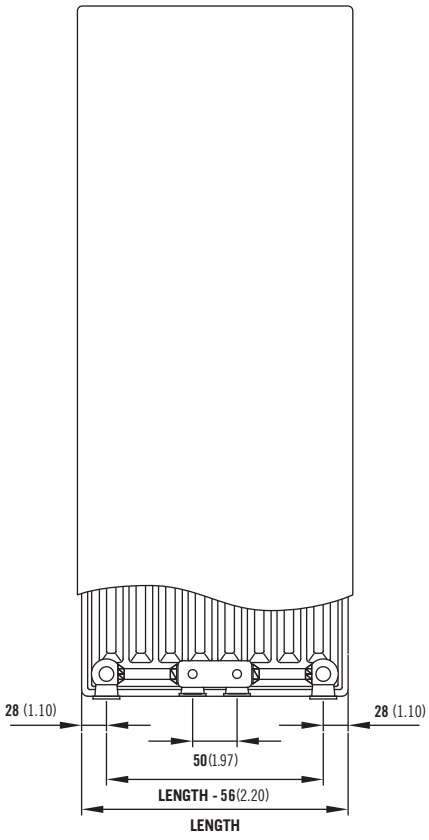

Comes complete with Stelrad's class leading safety bracket.

STR

50 Δt (75/65/20°C)

Height	Length mm	Sections	STR2 Heat output UIN	STR2 Watts	STR2 Btu/hr	STR3 UIN	STR3 Watts	STR3 Btu/hr	STR4 UIN	STR4 Watts	STR4 Btu/hr	STR6 UIN	STR6 Watts	STR6 Btu/hr	STR8 UIN	STR8 Watts	STR8 Btu/hr
645	425	12	140129	419	1430	-	-	-	-	-	-	-	-	-	-	-	-
	625	18	-	-	-	140130	611	2085	-	-	-	-	-	-	-	-	-
745	425	12	-	-	-	-	-	-	140022	475	1621	-	-	-	-	-	-
	625	18	-	-	-	-	-	-	-	-	-	140023	693	2365	-	-	-
	825	24	-	-	-	-	-	-	-	-	-	-	-	-	140024	922	3146

Δt50 is the UK's industry standard for heating outputs, which has an operating temperature of 75/65/20°C if you have a low temperature heat source you may wish to consider Δt40 or Δt30 output (see your installer or system designer).

40 Δt (65/55/20°C)

Height	Length mm	Sections	STR2 Heat output UIN	STR2 Watts	STR2 Btu/hr	STR3 UIN	STR3 Watts	STR3 Btu/hr	STR4 UIN	STR4 Watts	STR4 Btu/hr	STR6 UIN	STR6 Watts	STR6 Btu/hr	STR8 UIN	STR8 Watts	STR8 Btu/hr
645	425	12	140129	314	1070	-	-	-	-	-	-	-	-	-	-	-	-
	625	18	-	-	-	140130	457	1560	-	-	-	-	-	-	-	-	-
745	425	12	-	-	-	-	-	-	140022	355	1213	-	-	-	-	-	-
	625	18	-	-	-	-	-	-	-	-	-	140023	518	1769	-	-	-
	825	24	-	-	-	-	-	-	-	-	-	-	-	-	140024	670	2353

30 Δt (55/45/20°C)

Height	Length mm	Sections	STR2 Heat output UIN	STR2 Watts	STR2 Btu/hr	STR3 UIN	STR3 Watts	STR3 Btu/hr	STR4 UIN	STR4 Watts	STR4 Btu/hr	STR6 UIN	STR6 Watts	STR6 Btu/hr	STR8 UIN	STR8 Watts	STR8 Btu/hr
645	425	12	140129	216	736	-	-	-	-	-	-	-	-	-	-	-	-
	625	18	-	-	-	140130	314	1074	-	-	-	-	-	-	-	-	-
745	425	12	-	-	-	-	-	-	140022	244	835	-	-	-	-	-	-
	625	18	-	-	-	-	-	-	-	-	-	140023	356	1217	-	-	-
	825	24	-	-	-	-	-	-	-	-	-	-	-	-	140024	475	1620

EN 442 Certification Data – CETIAT tested in accordance with BS EN 442

Type	STR2	STR3	STR4	STR6	STR8
Height	645	645	745	745	745
W/m at 75/65/20	419	611	475	693	922
n-coefficients	1.27	1.27	1.28	1.28	1.28
Heated Surface Area (m^2/m)	1.86	2.79	2.21	3.31	4.41
Weight (kg/m)	8.72	13.08	9.95	14.92	19.89
Water Contents (l/m)	1.32	1.98	1.56	2.34	3.12

STR mounting brackets

All dimensions in mm. Inches in brackets.

Floor mounting brackets available.
See page 42.

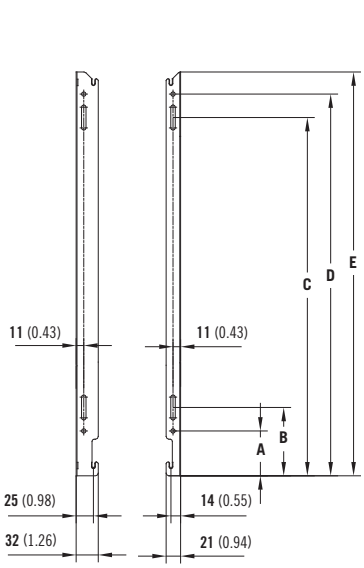

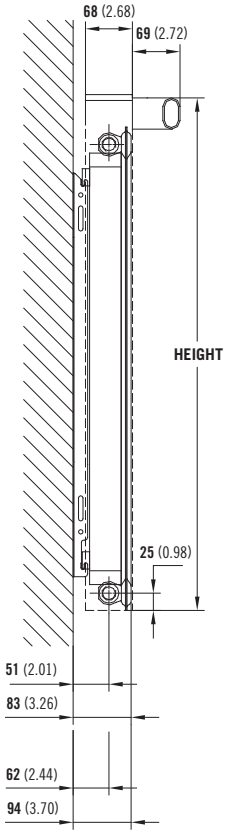

Dimensions	mm	in	mm	in
	700	27.56	600	23.62
A	65	2.56	65	2.56
B	99	3.90	99	3.90
C	519	20.43	419	16.50
D	553	21.77	453	17.83
E	585	23.03	485	19.09

STR wall mounting information

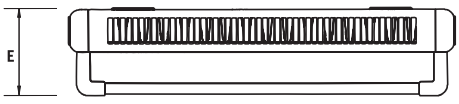

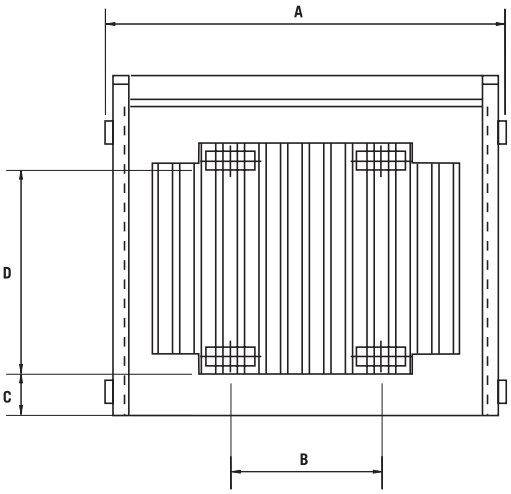

	STR2		STR3		STR4		STR6		STR8	
Dimensions	mm	in	mm	in	mm	in	mm	in	mm	in
A	425	16.73	625	24.60	425	16.73	625	24.60	825	32.48
B	167	6.57	300	11.81	167	6.57	300	11.81	500	19.68
C	60	2.36	60	2.36	60	2.36	60	2.36	60	2.36
D	555	21.85	555	21.85	555	21.85	555	21.85	555	21.85
E	140	5.51	140	5.51	140	5.51	140	5.51	140	5.51

Towel Rail

50 Δt (75/65/20°C)

Straight White | **Straight Chrome** | **Curved White** | **Curved Chrome**

Height	Length mm	Straight White: Max Projection mm	UIN	Heat output Watts	Btu/hr	Straight Chrome: Max Projection mm	UIN	Heat output Watts	Btu/hr	Curved White: Max Projection mm	UIN	Heat output Watts	Btu/hr	Curved Chrome: Max Projection mm	UIN	Heat output Watts	Btu/hr
760	500	100	148070	376	1283	100	147002	246	839	100	147006	376	1283	100	147012	246	839
	600	100	148071	445	1518	100	147003	294	1003	100	147007	445	1518	100	147013	294	1003
1211	500	100	148072	576	1965	100	147004	379	1293	100	147008	576	1965	100	147014	379	1293
	600	100	148073	686	2341	100	147005	453	1546	100	147009	686	2341	100	147015	453	1546
1744	500	100	148074	844	2880	100	142768	557	1900	100	147010	844	2880	100	147016	557	1900
	600	100	148075	1000	3412	100	142769	667	2276	100	147011	1000	3412	100	147017	667	2276

Δt50 is the UK's industry standard for heating outputs, which has an operating temperature of 75/65/20°C if you have a low temperature heat source you may wish to consider Δt40 or Δt30 output (see your installer or system designer).

EN 442 Certification Data - CETIAT tested in accordance with BS EN 442

Type	Straight/Curved Chrome						Straight/Curved White					
No of tubes												
Height	760	760	1211	1211	1744	1744	760	760	1211	1211	1744	1744
Length	500	600	500	600	500	600	500	600	500	600	500	600
Watts at 75/65/20	246	294	379	453	557	667	376	445	576	686	844	1000
n-coefficients	1.2545	1.2519	1.2757	1.2726	1.3015	1.2978	1.2320	1.2332	1.2528	1.2464	1.2783	1.2625
Heated Surface Area (m²)	0.71	0.83	1.11	1.30	1.60	1.88	0.71	0.83	1.11	1.30	1.60	1.88
Weight (kg)	6.12	7.06	9.63	11.10	13.86	15.98	6.12	7.06	9.63	11.10	13.86	15.98
Water Contents (l)	4.41	5.10	6.89	7.97	9.80	11.40	4.41	5.10	6.89	7.97	9.80	11.40
KM (P/dTn)	1.8179	2.1949	2.5779	3.1188	3.4249	4.1610	3.0343	3.5743	4.285	5.2327	5.6826	7.1623

		STRAIGHT MODELS					CURVED MODELS				
				Wall Mounting Positions					Wall Mounting Positions		
A Width (mm)	B Height (mm)	C Depth (mm)	D Tap Centres (mm)	E (mm)	F (mm)	G (mm)	C Depth (mm)	D Tap Centres (mm)	E (mm)	F (mm)	G (mm)
400	678	30	356	70	216	65-75					
500	760	30	456	70	316	65-75	56.0	456	110	236	40-45
600	760	30	556	70	416	65-75	60.0	556	110	336	40-45
500	1211	30	456	70	316	65-75	56.0	456	110	236	40-45
600	1211	30	556	70	416	65-75	60.0	556	110	336	40-45
500	1744	30	456	70	316	65-75	56.0	456	110	236	40-45
600	1744	30	556	70	416	65-75	60.0	556	110	336	40-45

Straight models

All dimensions in mm. Inches in brackets.

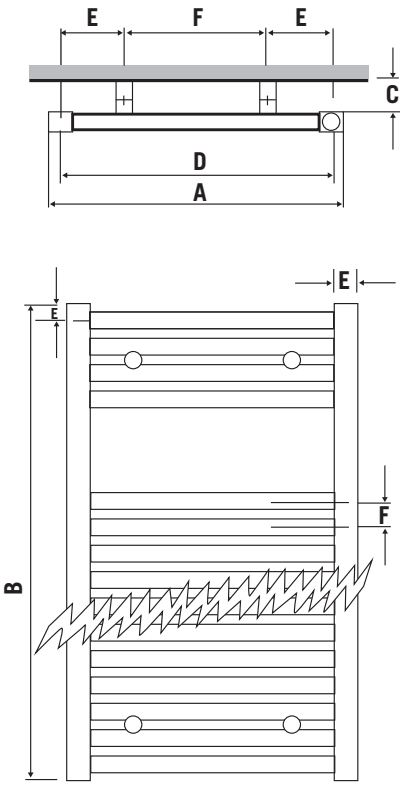

Curved models

All dimensions in mm. Inches in brackets.

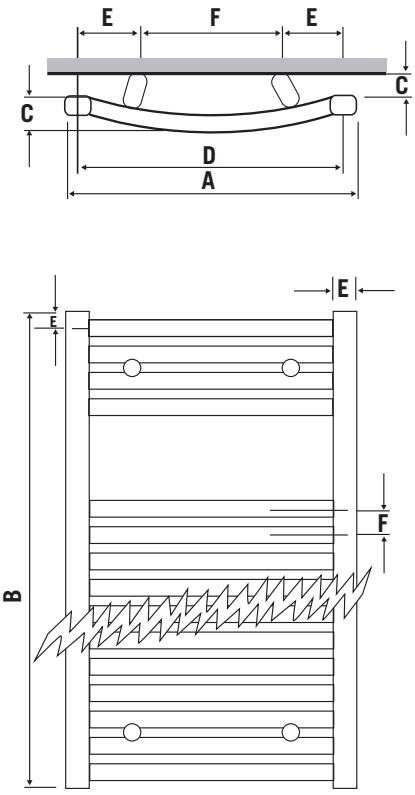

Brackets positions

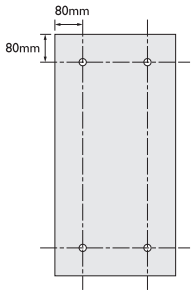

Electric element option

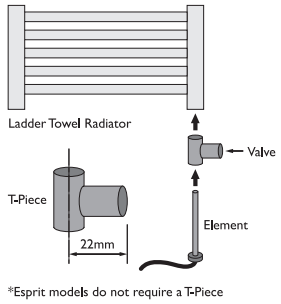

See page 59 for dimensions.

Mini Towel Rail

50 Δt (75/65/20°C) **White** **Chrome**

Height	Length mm	Max Projection mm	Heat output UIN	Heat output Watts	Heat output Btu/hr	Max Projection mm	Heat output UIN	Heat output Watts	Heat output Btu/hr
678	400	100	147000	273	931	100	147001	175	597

Δt50 is the UK's industry standard for heating outputs, which has an operating temperature of 75/65/20°C if you have a low temperature heat source you may wish to consider Δt40 or Δt30 output (see your installer or system designer).

EN 442 Certification Data - CETIAT tested in accordance with BS EN 442

Type	White	Chrome
No of tubes		
Height	14	14
Length	678	678
Watts at 75/65/20	400	175
n-coefficients	1.2232	1.2535
Heated Surface Area (m²)	0.51	0.51
Weight (kg)	4.57	4.57
Water Contents (l)	3.20	3.20
KM (P/dTn)	2.2803	1.2983

Mini Towel Rail

All dimensions in mm. Inches in brackets.

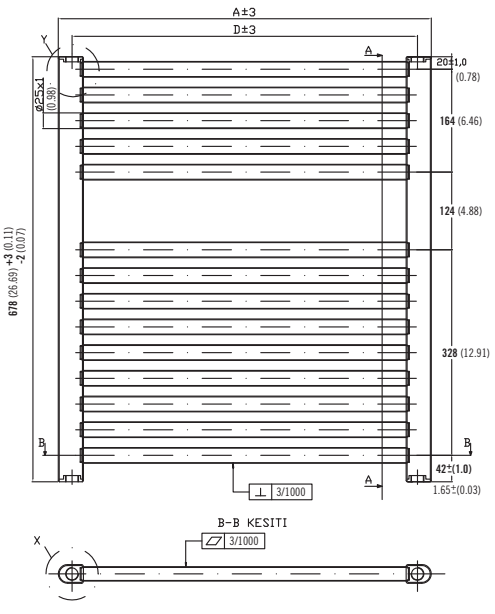

Stelrad Caliente Towel Rail

50Δt (75/65/20°C) Single Towel Rail Double Towel Rail

Height	Length mm	UIN	Heat output Watts	Heat output Btu/hr	Length mm	UIN	Heat output Watts	Heat output Btu/hr
755	450	407501450	389	1327	450	407502450	552	1883
	500	407501500	431	1471	500	407502500	616	2102
	600	407501600	517	1764	600	407502600	748	2552
	750	407501750	645	2201	750	407502750	947	3231
1199	450	401101450	615	2098	450	401102450	868	2962
	500	401101500	675	2303	500	401102500	963	3286
	600	401101600	794	2709	600	401102600	1154	3937
	750	401101750	972	3316	750	401102750	1441	4917
1791	450	401701450	900	3071	450	401702450	1268	4326
	500	401701500	986	3364	500	401702500	1402	4784
	600	401701600	1158	3951	600	401702600	1670	5698
	750	401701750	1416	4831	750	401702750	2073	7073
2013	450	402001450	1002	3419	450	402002450	1427	4869
	500	402001500	1099	3750	500	402002500	1576	5377
	600	402001600	1294	4415	600	402002600	1874	6394
	750	402001750	1586	5411	750	402002750	2321	7919

Δt50 is the UK's industry standard for heating outputs, which has an operating temperature of 75/65/20°C if you have a low temperature heat source you may wish to consider Δt40 or Δt30 output (see your installer or system designer).

Caliente Towel Rail Single

All dimensions in mm. Inches in brackets.

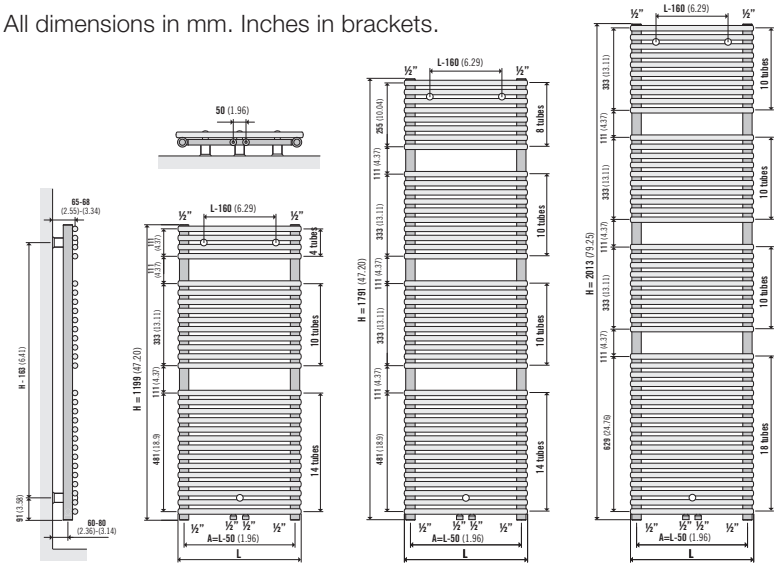

Caliente Towel Rail Double

All dimensions in mm. Inches in brackets.

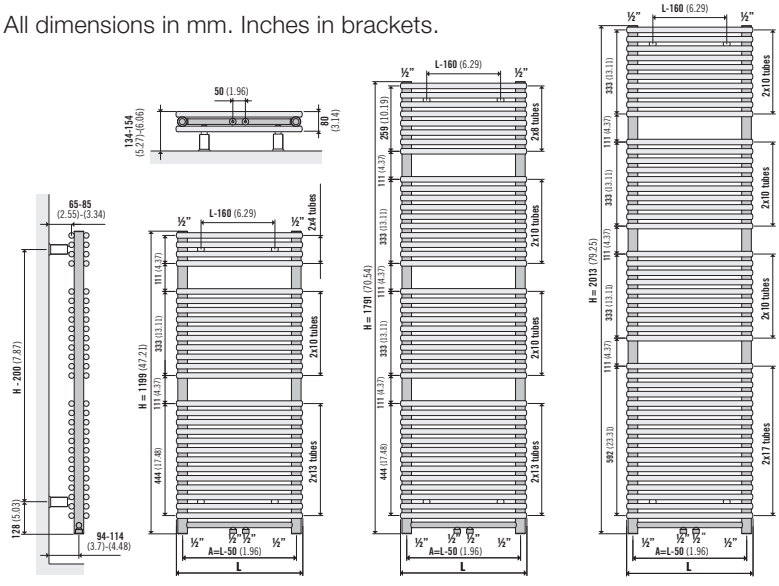

Caliente Towel Rail piping options - Single and Double

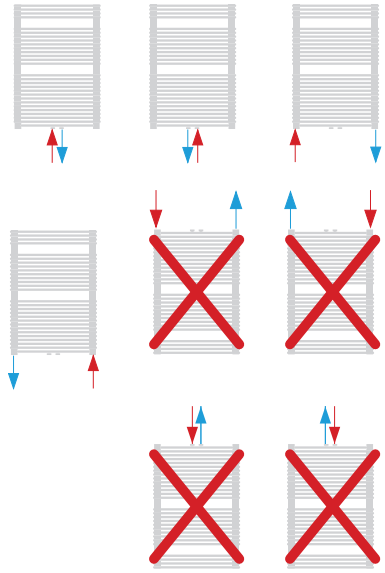

Piping options: BBOE (Bottom, Bottom, Opposite, End)

New Stelrad Curved Caliente Towel Rail

50Δt (75/65/20°C) Single Towel Rail

Height	Length mm	UIN	Heat output Watts	Btu/hr
1199	496	401111496	675	2303
	595	401111595	794	2709
1791	496	401711496	986	3364
	595	401711595	1158	3951
2013	496	402011496	1099	3750
	595	402011595	1294	4415

Δt50 is the UK's industry standard for heating outputs, which has an operating temperature of 75/65/20°C if you have a low temperature heat source you may wish to consider Δt40 or Δt30 output (see your installer or system designer).

Curved Caliente Towel Rail

All dimensions in mm. Inches in brackets.

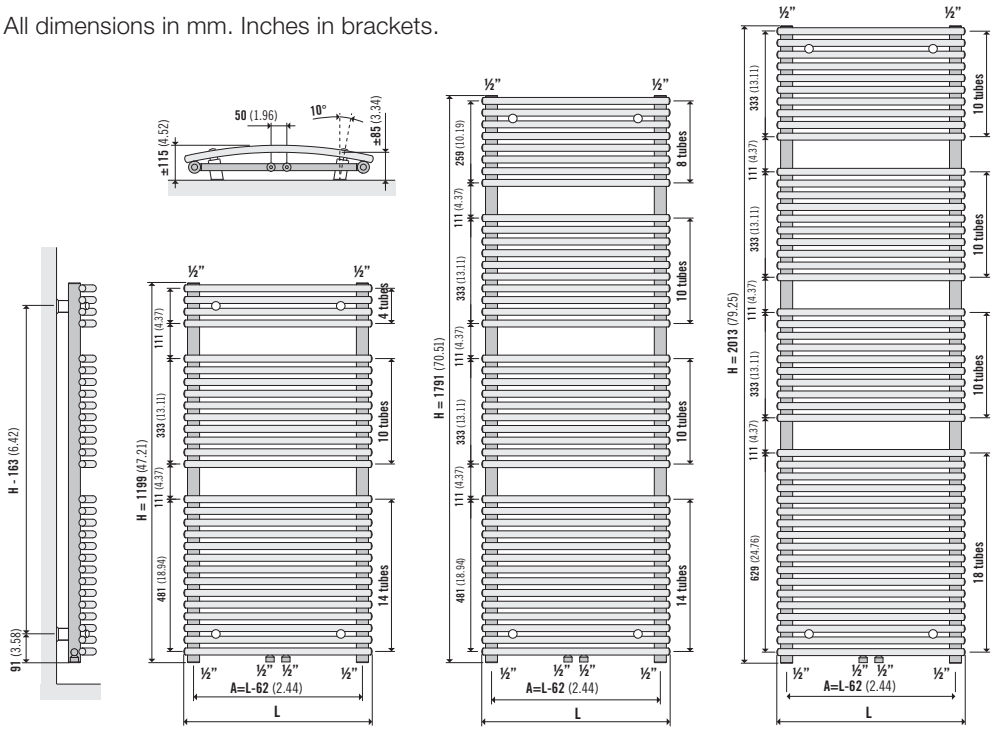

Curved Caliente Towel Rail piping options

Piping options: BBOE (Bottom, Bottom, Opposite, End)

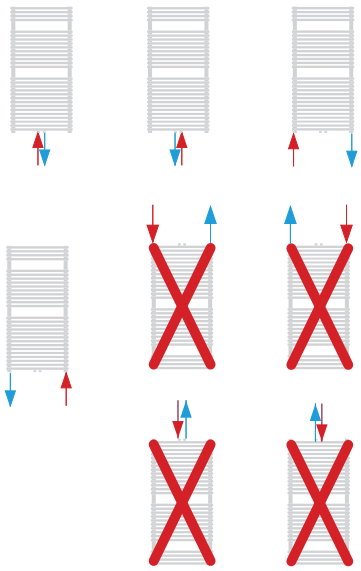

Stelrad Concord Towel Rail

50Δt (75/65/20°C) Single

Height	Length mm	Tapping centres (A)	UIN	Heat output Watts	Btu/hr
731	450	400	148581	342	1167
	600	550	148582	447	1525
1186	450	400	148583	530	1808
	600	550	148584	694	2368
1511	450	400	148585	666	2272
	600	550	148586	869	2965
1771	450	400	148587	777	2651
	600	550	148588	1010	3446

Δt50 is the UK's industry standard for heating outputs, which has an operating temperature of 75/65/20°C if you have a low temperature heat source you may wish to consider Δt40 or Δt30 output (see your installer or system designer).

Concord Towel Rail single wall mounting information

All dimensions in mm. Inches in brackets.

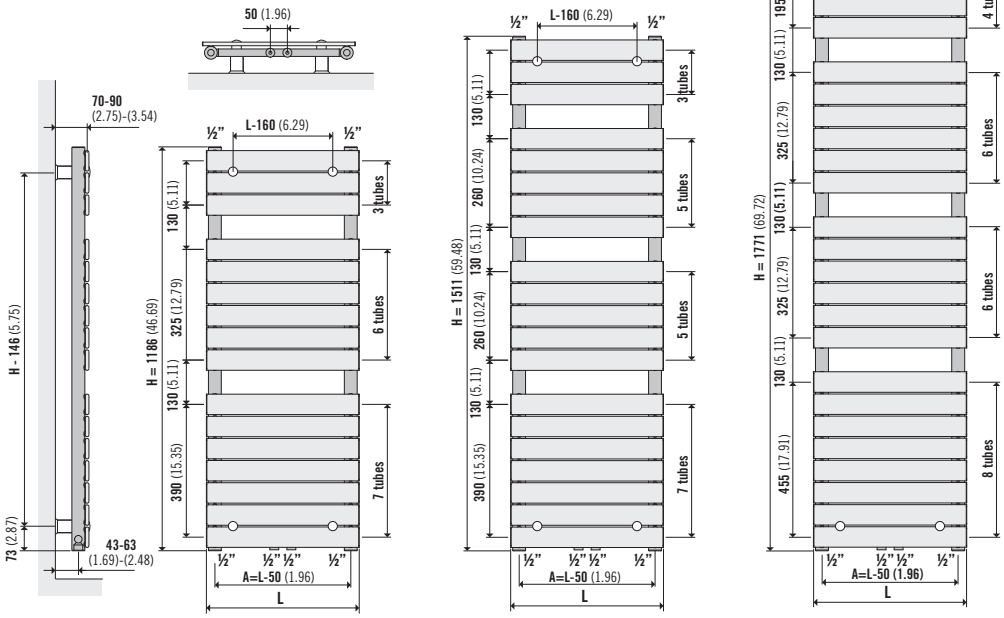

Concord Towel Rail piping options

Piping options: BBOE (Bottom, Bottom, Opposite, End)

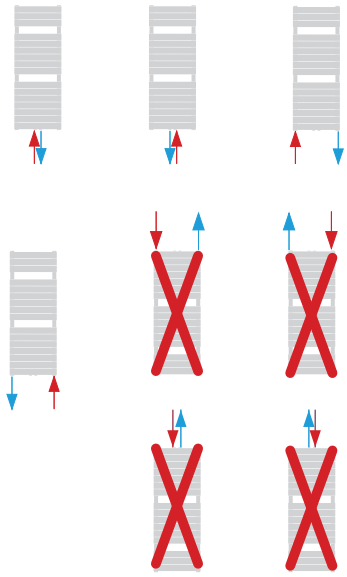

Stelrad Esprit

50 Δt (75/65/20°C)

Height	Length mm	Straight White: Max Projection mm	UIN	Heat output Watts	Btu/hr	Straight Chrome: Max Projection mm	UIN	Heat output Watts	Btu/hr	Curved White: Max Projection mm	UIN	Heat output Watts	Btu/hr	Curved Chrome: Max Projection mm	UIN	Heat output Watts	Btu/hr
900	450	100	148049	405	1382	100	148053	316	1078	-	-	-	-	-	-	-	-
	550	-	-	-	-	-	-	-	-	75	148057	452	1543	75	148061	384	1311
1200	450	100	148050	554	1891	100	148054	432	1474	-	-	-	-	-	-	-	-
	550	100	148051	676	2307	100	148055	527	1799	75	148058	676	2307	75	148062	527	1799
1500	450	-	-	-	-	-	-	-	-	-	-	-	-	-	-	-	-
	550	-	-	-	-	-	-	-	-	75	148059	860	2935	75	148063	671	2290
1800	450	-	-	-	-	-	-	-	-	-	-	-	-	-	-	-	-
	550	100	148052	1056	3604	100	148056	824	2812	75	148060	1056	3604	75	148064	824	2812

Δt50 is the UK's industry standard for heating outputs, which has an operating temperature of 75/65/20°C if you have a low temperature heat source you may wish to consider Δt40 or Δt30 output (see your installer or system designer).

Straight

EN 442 Certification Data - CETIAT tested in accordance with BS EN 442

Type	White				Chrome			
Height (mm)	900	1200	1200	1800	900	1200	1200	1800
Width (mm)	450	450	550	550	450	450	550	550
Btu/h* t50	1382	1891	2307	3604	1078	1474	1799	2812
Watt* t50	405	554	676	1056	316	432	527	824
Wall to tap centre (mm)	310	310	410	410	310	310	410	410
Centres from wall (mm)	80	80	80	80	80	80	80	80
Max. Projection (mm)	100	100	100	100	100	100	100	100
Weight (mm)	6	8	9	14	6	8	9	14
Water contents (ltrs)	1.79	2.46	2.79	4.3	1.79	2.46	2.79	4.3
Element watt	350	650	650	900	350	350	350	900

Curved

EN 442 Certification Data - CETIAT tested in accordance with BS EN 442

Type	White				Chrome			
Height	900	1200	1500	1800	900	1200	1500	1800
Width (mm)	550	550	550	550	550	550	550	550
Btu/h* t50	1679	2307	2935	3604	1311	1799	2290	2812
Watt* t50	492	676	860	1056	384	527	671	824
Wall to tap centre (mm)	410	410	410	410	410	410	410	410
Centres from wall (mm)	40	40	40	40	40	40	40	40
Max. Projection (mm)	75	75	75	75	75	75	75	75
Weight (mm)	6	9	11	14	6	9	11	14
Water contents (ltrs)	2.03	2.79	3.54	4.3	2.03	2.79	3.54	4.3
Element watt	350	650	900	900	350	350	650	900

Esprit Straight

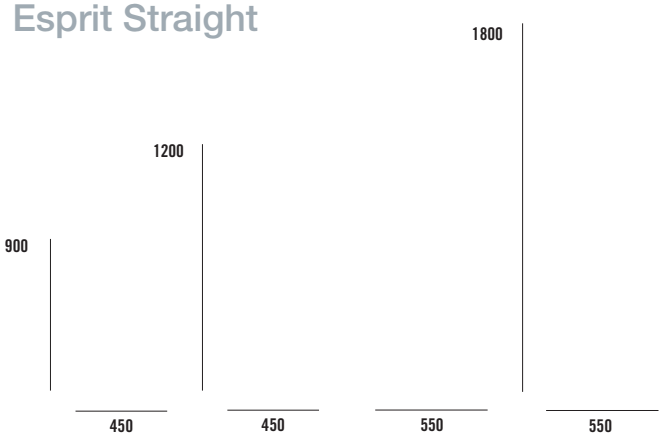

Esprit Curved

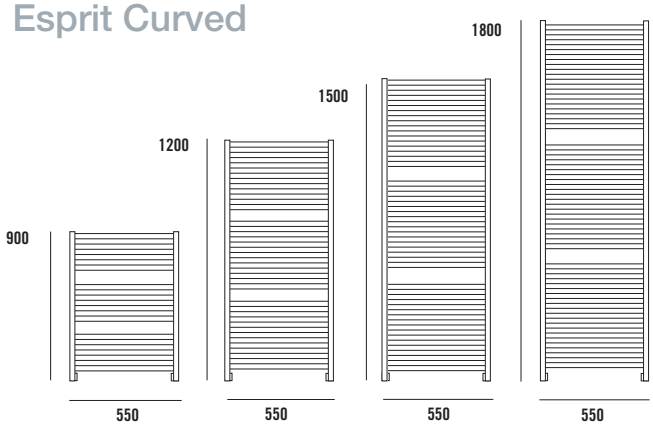

Floor mounting brackets available.
See page 42.

Brackets positions for Straight and Curved

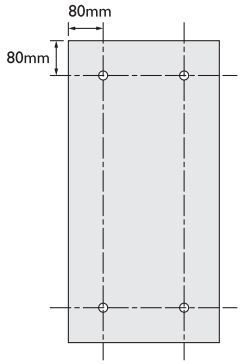

Electric element option for Straight and Curved

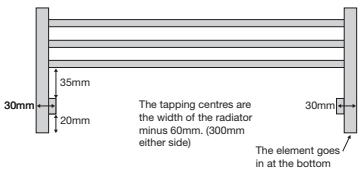

Bracket assembly for Straight and Curved

We recommend that you place the brackets between the 2nd and 3rd pipes 80mm from the radiator to the centre of the bracket.

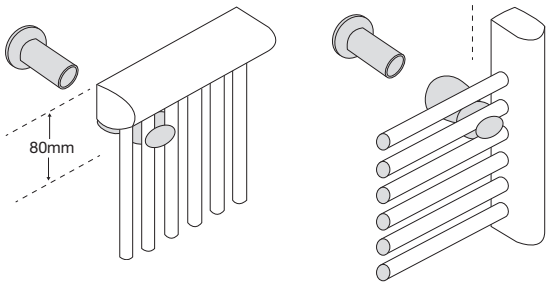

Stelrad Softline

50 Δt (75/65/20°C)

Height	Length mm	Sections	K1 UIN	K1 Heat output Watts	K1 Heat output Btu/hr	P+ UIN	P+ Heat output Watts	P+ Heat output Btu/hr	K2 UIN	K2 Heat output Watts	K2 Heat output Btu/hr
300	500	15	80301105	255	870	-	-	-	80302205	491	1675
	1000	30	80301110	509	1737	-	-	-	80302210	982	3351
	1500	45	80301115	764	2607	-	-	-	80302215	1473	5026
	2000	60	80301120	1018	3473	-	-	-	80302220	1964	6701
450	400	12	80451104	302	1030	-	-	-	80452204	548	1870
	500	15	80451105	378	1290	-	-	-	80452205	686	2341
	600	18	80451106	454	1549	-	-	-	80452206	823	2808
	700	21	80451107	529	1805	-	-	-	80452207	960	3276
	800	24	80451108	605	2064	-	-	-	80452208	1097	3743
	900	27	80451109	680	2320	-	-	-	80452209	1234	4210
	1000	30	80451110	756	2579	80452110	1055	3600	80452210	1371	4678
	1100	33	80451111	832	2839	80452111	1161	3961	80452211	1508	5145
	1200	36	80451112	907	3095	80452112	1266	4320	80452212	1645	5613
	1400	42	80451114	1058	3610	80452114	1477	5040	80452214	1919	6548
	1600	48	80451116	1210	4129	80452116	1688	5761	80452216	2194	7486
	1800	54	80451118	1361	4644	-	-	-	80452218	2468	8421
	2000	60	80451120	1512	5159	-	-	-	80452220	2742	9356
600	400	12	80601104	392	1338	80602104	538	1836	80602204	693	2365
	500	15	80601105	490	1672	80602105	673	2296	80602205	866	2955
	600	18	80601106	588	2006	80602106	807	2753	80602206	1039	3545
	700	21	80601107	686	2341	80602107	942	3214	80602207	1212	4135
	800	24	80601108	784	2675	80602108	1076	3671	80602208	1386	4729
	900	27	80601109	882	3009	80602109	1211	4132	80602209	1559	5319
	1000	30	80601110	980	3344	80602110	1345	4589	80602210	1732	5910
	1100	33	80601111	1078	3678	80602111	1480	5050	80602211	1905	6500
	1200	36	80601112	1176	4013	80602112	1614	5507	80602212	2078	7090
	1400	42	80601114	1372	4681	80602114	1883	6425	80602214	2425	8274
	1600	48	80601116	1568	5350	80602116	2152	7343	80602216	2771	9455
	1800	54	80601118	1764	6019	-	-	-	80602218	3118	10639
	2000	60	80601120	1960	6688	-	-	-	80602220	3464	11819
700	400	12	80701104	447	1525	-	-	-	80702204	784	2675
	500	15	80701105	559	1907	-	-	-	80702205	981	3347
	600	18	80701106	670	2286	-	-	-	80702206	1177	4016
	700	21	80701107	782	2668	-	-	-	80702207	1373	4685
	800	24	80701108	894	3050	-	-	-	80702208	1569	5353
	900	27	80701109	1005	3429	-	-	-	80702209	1765	6022
	1000	30	80701110	1117	3811	-	-	-	80702210	1961	6691
	1100	33	80701111	1229	4193	-	-	-	80702211	2157	7360
	1200	36	80701112	1340	4572	-	-	-	80702212	2353	8028
	1400	42	80701114	1564	5336	-	-	-	80702214	2745	9366
	1600	48	80701116	1787	6097	-	-	-	80702216	3138	10707
	1800	54	80701118	2011	6862	-	-	-	80702218	3530	12044
	2000	60	80701120	2234	7622	-	-	-	80702220	3922	13382

Δt50 is the UK's industry standard for heating outputs, which has an operating temperature of 75/65/20°C if you have a low temperature heat source you may wish to consider Δt40 or Δt30 output (see your installer or system designer).

Stelrad Softline

40 Δt (65/55/20°C)

K1

P+

K2

Height	Length mm	Sections	K1 UIN	K1 Heat output Watts	K1 Heat output Btu/hr	P+ UIN	P+ Heat output Watts	P+ Heat output Btu/hr	K2 UIN	K2 Heat output Watts	K2 Heat output Btu/hr
300	500	15	80301105	191	651	-	-	-	80302205	367	1253
	1000	30	80301110	381	1299	-	-	-	80302210	735	2506
	1500	45	80301115	571	1950	-	-	-	80302215	1102	3759
	2000	60	80301120	761	2598	-	-	-	80302220	1469	5012
450	400	12	80451104	226	771	-	-	-	80452204	410	1399
	500	15	80451105	283	965	-	-	-	80452205	513	1751
	600	18	80451106	340	1159	-	-	-	80452206	616	2100
	700	21	80451107	396	1350	-	-	-	80452207	718	2450
	800	24	80451108	453	1544	-	-	-	80452208	821	2800
	900	27	80451109	509	1735	-	-	-	80452209	923	3149
	1000	30	80451110	565	1929	80452110	789	2693	80452210	1026	3499
	1100	33	80451111	622	2123	80452111	868	2963	80452211	1128	3849
	1200	36	80451112	678	2315	80452112	947	3231	80452212	1230	4198
	1400	42	80451114	791	2700	80452114	1105	3770	80452214	1435	4898
	1600	48	80451116	905	3088	80452116	1337	4561	80452216	1641	5599
	1800	54	80451118	1018	3474	-	-	-	80452218	1846	6299
	2000	60	80451120	1131	3859	-	-	-	80452220	2051	6998
600	400	12	80601104	293	1000	80602104	402	1373	80602204	518	1769
	500	15	80601105	367	1251	80602105	503	1718	80602205	648	2210
	600	18	80601106	440	1501	80602106	604	2060	80602206	777	2652
	700	21	80601107	513	1751	80602107	705	2404	80602207	907	3093
	800	24	80601108	586	2001	80602108	805	2746	80602208	1037	3537
	900	27	80601109	660	2251	80602109	906	3091	80602209	1166	3979
	1000	30	80601110	733	2501	80602110	1006	3433	80602210	1296	4420
	1100	33	80601111	806	2751	80602111	1107	3777	80602211	1425	4862
	1200	36	80601112	880	3001	80602112	1207	4119	80602212	1554	5303
	1400	42	80601114	1026	3502	80602114	1408	4806	80602214	1814	6189
	1600	48	80601116	1173	4002	80602116	1610	5492	80602216	2073	7072
	1800	54	80601118	1319	4502	-	-	-	80602218	2332	7958
	2000	60	80601120	1466	5002	-	-	-	80602220	2591	8841
700	400	12	80701104	334	1141	-	-	-	80702204	586	2001
	500	15	80701105	418	1427	-	-	-	80702205	734	2504
	600	18	80701106	501	1710	-	-	-	80702206	880	3004
	700	21	80701107	585	1996	-	-	-	80702207	1027	3504
	800	24	80701108	669	2282	-	-	-	80702208	1174	4004
	900	27	80701109	752	2565	-	-	-	80702209	1320	4505
	1000	30	80701110	836	2851	-	-	-	80702210	1467	5005
	1100	33	80701111	919	3137	-	-	-	80702211	1613	5505
	1200	36	80701112	1002	3420	-	-	-	80702212	1760	6005
	1400	42	80701114	1170	3992	-	-	-	80702214	2053	7006
	1600	48	80701116	1337	4561	-	-	-	80702216	2347	8009
	1800	54	80701118	1504	5132	-	-	-	80702218	2640	9009
	2000	60	80701120	1671	5702	-	-	-	80702220	2934	10010

Stelrad Softline

30 Δt (55/45/20°C)

Height	Length mm	Sections	K1 UIN	K1 Heat output Watts	K1 Heat output Btu/hr	P+ UIN	P+ Heat output Watts	P+ Heat output Btu/hr	K2 UIN	K2 Heat output Watts	K2 Heat output Btu/hr
300	500	15	80301105	131	448	-	-	-	80302205	253	863
	1000	30	80301110	262	894	-	-	-	80302210	506	1726
	1500	45	80301115	393	1342	-	-	-	80302215	759	2588
	2000	60	80301120	524	1789	-	-	-	80302220	1011	3451
450	400	12	80451104	156	531	-	-	-	80452204	282	963
	500	15	80451105	195	664	-	-	-	80452205	353	1205
	600	18	80451106	234	798	-	-	-	80452206	424	1446
	700	21	80451107	272	930	-	-	-	80452207	494	1687
	800	24	80451108	312	1063	-	-	-	80452208	565	1928
	900	27	80451109	350	1195	-	-	-	80452209	636	2168
	1000	30	80451110	389	1328	80452110	543	1854	80452210	706	2409
	1100	33	80451111	428	1462	80452111	598	2040	80452211	777	2650
	1200	36	80451112	467	1594	80452112	652	2225	80452212	847	2891
	1400	42	80451114	545	1859	80452114	761	2595	80452214	988	3372
	1600	48	80451116	623	2126	80452116	920	3140	80452216	1130	3855
	1800	54	80451118	701	2392	-	-	-	80452218	1271	4337
	2000	60	80451120	779	2657	-	-	-	80452220	1412	4818
600	400	12	80601104	202	689	80602104	277	945	80602204	357	1218
	500	15	80601105	252	861	80602105	347	1183	80602205	446	1522
	600	18	80601106	303	1033	80602106	416	1418	80602206	535	1826
	700	21	80601107	353	1205	80602107	485	1655	80602207	624	2130
	800	24	80601108	404	1378	80602108	554	1891	80602208	714	2435
	900	27	80601109	454	1550	80602109	624	2128	80602209	803	2739
	1000	30	80601110	505	1722	80602110	693	2363	80602210	892	3043
	1100	33	80601111	555	1894	80602111	762	2601	80602211	981	3347
	1200	36	80601112	606	2066	80602112	831	2836	80602212	1070	3651
	1400	42	80601114	707	2411	80602114	970	3309	80602214	1249	4261
	1600	48	80601116	808	2755	80602116	1108	3781	80602216	1427	4869
	1800	54	80601118	908	3100	-	-	-	80602218	1606	5479
	2000	60	80601120	1009	3444	-	-	-	80602220	1784	6087
700	400	12	80701104	230	785	-	-	-	80702204	404	1378
	500	15	80701105	288	982	-	-	-	80702205	505	1724
	600	18	80701106	345	1177	-	-	-	80702206	606	2068
	700	21	80701107	403	1374	-	-	-	80702207	707	2413
	800	24	80701108	460	1571	-	-	-	80702208	808	2757
	900	27	80701109	518	1766	-	-	-	80702209	909	3101
	1000	30	80701110	575	1963	-	-	-	80702210	1010	3446
	1100	33	80701111	633	2160	-	-	-	80702211	1111	3790
	1200	36	80701112	690	2355	-	-	-	80702212	1212	4135
	1400	42	80701114	805	2748	-	-	-	80702214	1414	4823
	1600	48	80701116	920	3140	-	-	-	80702216	1616	5514
	1800	54	80701118	1036	3534	-	-	-	80702218	1818	6203
	2000	60	80701120	1151	3926	-	-	-	80702220	2020	6892

EN 442 Certification Data – CETIAT tested in accordance with BS EN 442

Type	K1				P+		K2			
Height	300	450	600	700	450	600	300	450	600	700
W/m at 75/65/20	509	756	980	1117	1055	1345	982	1371	1732	1961
n-coefficients	1.32	1.31	1.29	1.29	1.33	1.34	1.33	1.33	1.33	1.34
Heated Surface Area (m^2/m)	2.09	3.37	4.66	5.51	3.84	5.24	3.51	5.62	7.74	9.15
Weight (kg/m)	9.31	14.51	19.70	22.90	22.04	29.80	16.80	25.90	35.00	40.53
Water Contents (l/m)	1.89	2.57	3.25	3.77	5.15	6.60	3.70	5.15	6.60	7.63
Wall to tap centre (mm)	54	54	54	64	64	64	64	72	72	72

Softline mounting brackets

All dimensions in mm. Inches in brackets.

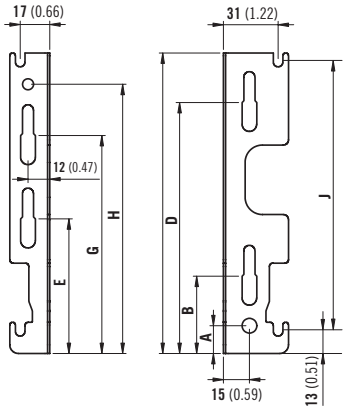

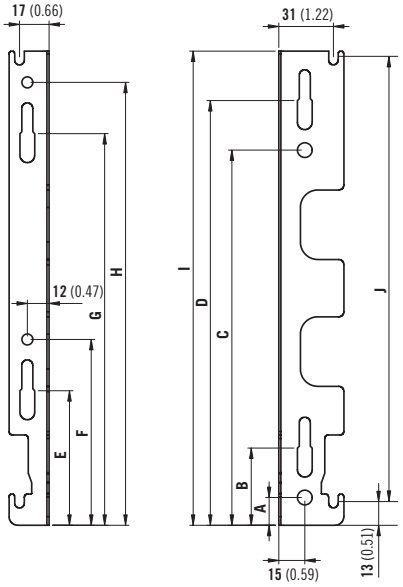

H450-600-700

Height	mm	in	mm	in	mm	in	mm	in
	300	11.81	450	17.72	600	23.62	700	27.56
A	16	0.63	16	0.63	16	0.63	16	0.63
B	44	1.73	44	1.73	44	1.73	44	1.73
C	-	-	266	10.47	416	16.38	516	20.31
D	144	5.67	294	11.57	444	17.48	544	21.42
E	77	3.03	77	3.03	77	3.03	77	3.03
F	-	-	107	4.21	107	4.21	107	4.21
G	125	4.92	275	10.83	425	16.73	525	20.67
H	155	6.10	305	12.01	455	17.91	555	21.85
I	173	6.81	323	12.72	473	18.62	573	22.56
J	155	6.10	305	12.01	455	17.91	555	21.85

K1, P+ and K2 lug positions

All dimensions in mm. Inches in brackets.

K1

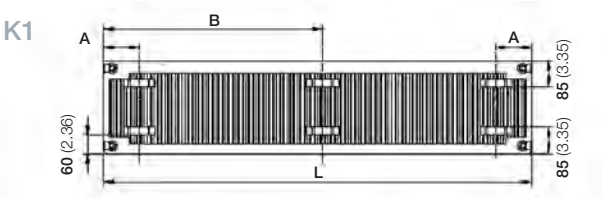

P+/K2

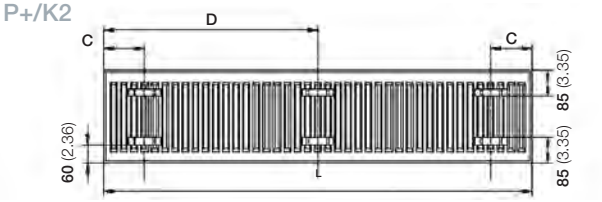

	K1				TYPE P+/K2			
L	A		B		C		D	
	mm	in	mm	in	mm	in	mm	in
400	117	-	-	-	133	-	-	-
500 - 1100	150	-	-	-	133	-	-	-
1200 - 1600	283	-	-	-	267	-	-	-
1800 - 2000	283	-	(L/2) +17		267	-	(L/2)	

Pressure drops

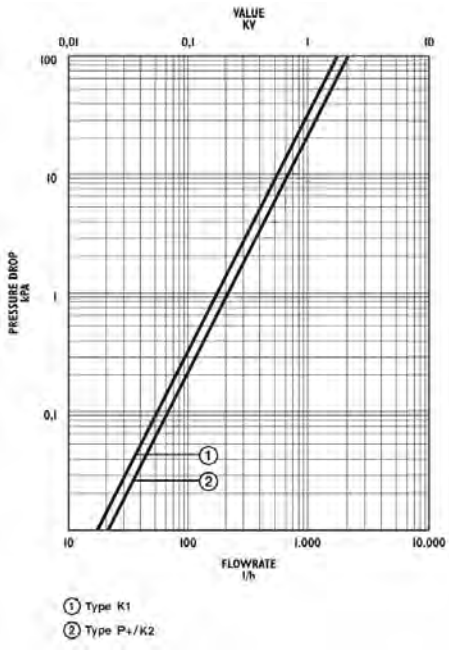

Softline wall mounting information

All dimensions in mm. Inches in brackets.

Floor mounting brackets available.
See page 42.

K1

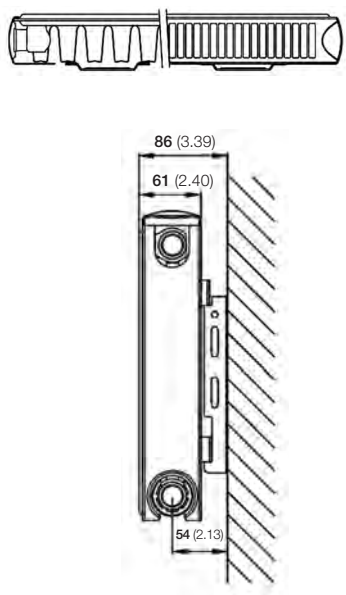

P+

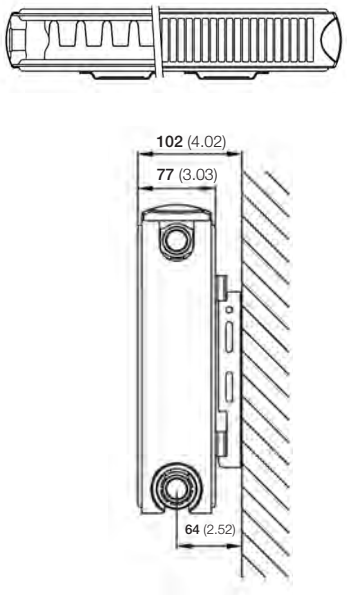

K2

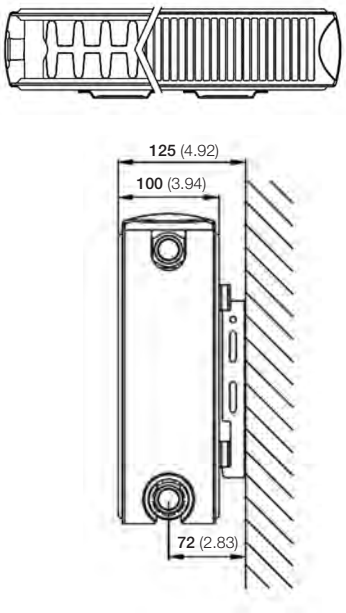

Designer

Stelrad's designer ranges provide additional options to make a real style statement in any commercial or domestic environment.

Compact with Style Range

- Stunning looks and value, bridging the gap between standard radiators and more expensive models
- Height options from 200mm up to 2200mm and lengths from 400mm to 2000mm
- Horizontal, Vertical and Lo-Line options available to suit any space
- For colour options refer to page 146

Planar Range

- Supplied fully assembled, and easy to install
- Every model comes with a directional air vent to direct waterflow during venting
- Choice of four heights and 74 models in the most popular sizes
- Wide range of outputs with outstanding heating performance
- For colour options refer to page 146

Concord Range

- The Stelrad Concord incorporates flat oval precision tubes, pressure welded with a 4mm air gap to symmetric water channels. Flat oval steel tubes 70mm x 8mm. Water channel tubing 37mm x 32mm
- Concord Plane - slim flat horizontal tubes
- Concord Lo-Line - Despite having only two panels the Lo-Line offers performance which belies its size
- Concord Vertical - The same highly engineered tubes in a vertical model
- Concord Slimline - Subtle visual appeal displaying the slim form of the tubes
- All models available in a wide range of height, width and output options
- 2 x 15mm connections BOE are fitted as standard. 4 x 15mm connections available as an optional extra, prices available on request
- For colour options refer to page 147

Classic Column Range

- At home in either traditional or modern environments
- Standard model supplied in RAL 9016, also available in a wide choice of other RAL or BS colour options to harmonise with the boldest or most neutral of decors
- 7 height options, six vertical and a choice of two, three or four columns to provide a versatile sizing flexibility ideal for use in a minimalist project, or for applications where work space is restricted
- For colour options refer to page 147

Swing

- Stylish curved cover
- High output vertical models where space is at a premium
- Choice of 2 heights and 3 lengths
- For colour options refer to page 146

Caliente

- Stylish tube on tube high output design
- Vertical, horizontal, single and double tube versions
- 15 models in three heights and a variety of widths
- High quality construction and paint finish rounded edges
- Available in white (RAL 9016) only

Excel

- Floor or wall mounted
- Available in 3 sizes
- Optional outputs
- Sophisticated black as standard (RAL 9005)

Arc & Wave

- Precision curved fine tubes
- Available in 3 sizes and 3 heat output options

Vistaline

- Range of sizes and outputs
- Available with additional row of tubes for greater heat output
- Large range of colour options available (see page 147)

Ellipse

- Range of sizes and outputs
- Choice of outward or inward facing columns
- Large range of colour options available (see page 147)

Optia

- Available in 3 lengths and 3 output options
- Incorporates towel warmer
- Cold metallic grey (BR 0007)

EN EURONORM 442 CE

For further information and advice call 0844 543 6200

Stelrad Compact with Style Range

50 Δt (75/65/20°C)

Height	Length mm	Sections	K1 Heat output UIN	K1 Watts	K1 Btu/hr	K2 Heat output UIN	K2 Watts	K2 Btu/hr
300	500	15	7431105	235	802	7432205	465	1587
	1000	30	7431110	469	1600	7432210	929	3171
	1400	42	7431114	658	2245	7432214	1301	4440
	2000	60	7431120	940	3207	7432220	1858	6341
500	400	12	7451104	298	1017	7452204	555	1894
	600	18	7451106	448	1529	7452206	833	2842
	800	24	7451108	597	2037	7452208	1110	3787
	1000	30	7451110	746	2545	7452210	1388	4736
	1200	36	7451112	895	3054	7452212	1666	5684
	1400	42	7451114	1044	3562	7452214	1943	6630
	1600	48	7451116	1194	4074	7452216	2221	7578
	1800	54	7451118	1343	4582	7452218	2498	8523
	2000	60	7451120	1492	5091	7452220	2776	9472
600	400	12	7461104	348	1187	7462204	640	2184
	600	18	7461106	522	1781	7462206	961	3279
	800	24	7461108	696	2375	7462208	1281	4371
	1000	30	7461110	870	2968	7462210	1601	5463
	1200	36	7461112	1044	3562	7462212	1921	6554
	1400	42	7461114	1218	4156	7462214	2241	7646
	1600	48	7461116	1392	4750	7462216	2562	8742
	1800	54	7461118	1566	5343	7462218	2882	9833
	2000	60	7461120	1740	5937	7462220	3202	10925

Δt50 is the UK's industry standard for heating outputs, which has an operating temperature of 75/65/20°C if you have a low temperature heat source you may wish to consider Δt40 or Δt30 output (see your installer or system designer).

40 Δt (65/55/20°C)

Height	Length mm	Sections	K1 Heat output UIN	K1 Watts	K1 Btu/hr	K2 Heat output UIN	K2 Watts	K2 Btu/hr
300	500	15	7431105	176	600	7432205	348	1187
	1000	30	7431110	351	1197	7432210	695	2372
	1400	42	7431114	491	1677	7432214	973	3321
	2000	60	7431120	702	2394	7432220	1390	4743
500	400	12	7451104	223	761	7452204	415	1416
	600	18	7451106	335	1143	7452206	623	2126
	800	24	7451108	447	1524	7452208	830	2833
	1000	30	7451110	558	1904	7452210	1038	3542
	1200	36	7451112	669	2284	7452212	1246	4252
	1400	42	7451114	781	2664	7452214	1453	4959
	1600	48	7451116	893	3047	7452216	1661	5668
	1800	54	7451118	1005	3428	7452218	1869	6375
	2000	60	7451120	1116	3808	7452220	2076	7085
600	400	12	7461104	260	888	7462204	479	1633
	600	18	7461106	390	1332	7462206	719	2453
	800	24	7461108	521	1776	7462208	958	3269
	1000	30	7461110	651	2220	7462210	1198	4086
	1200	36	7461112	781	2664	7462212	1437	4903
	1400	42	7461114	911	3109	7462214	1676	5719
	1600	48	7461116	1041	3553	7462216	1916	6539
	1800	54	7461118	1171	3997	7462218	2156	7355
	2000	60	7461120	1302	4441	7462220	2395	8172

Stelrad Compact with Style Range

30 Δt (55/45/20°C)

K1

K2

Height	Length mm	Sections	Heat output K1 UIN	Watts	Btu/hr	Heat output K2 UIN	Watts	Btu/hr
300	500	15	7431105	121	413	7432205	239	817
	1000	30	7431110	242	824	7432210	478	1633
	1400	42	7431114	338	1154	7432214	670	2287
	2000	60	7431120	483	1648	7432220	957	3266
500	400	12	7451104	153	524	7452204	286	975
	600	18	7451106	231	787	7452206	429	1464
	800	24	7451108	307	1049	7452208	572	1950
	1000	30	7451110	384	1311	7452210	715	2439
	1200	36	7451112	461	1573	7452212	858	2927
	1400	42	7451114	538	1834	7452214	1001	3414
	1600	48	7451116	615	2098	7452216	1144	3903
	1800	54	7451118	692	2360	7452218	1286	4389
	2000	60	7451120	768	2622	7452220	1430	4878
600	400	12	7461104	179	611	7462204	330	1125
	600	18	7461106	269	917	7462206	495	1689
	800	24	7461108	358	1223	7462208	660	2251
	1000	30	7461110	448	1529	7462210	825	2813
	1200	36	7461112	538	1834	7462212	989	3376
	1400	42	7461114	627	2140	7462214	1154	3938
	1600	48	7461116	717	2446	7462216	1319	4502
	1800	54	7461118	806	2752	7462218	1484	5064
	2000	60	7461120	896	3057	7462220	1649	5626

EN 442 Certification Data – CETIAT tested in accordance with BS EN 442

Type	K1			P+	K2			
Height	300	500	600	200	200	300	500	600
W/m at 75/65/20	470	746	870	483	614	898	1388	1601
n-coefficients	1.26	1.28	1.28	1.31	1.29	1.30	1.31	1.31
Heated Surface Area (m^2/m)	2.09	3.80	4.66	1.51	2.10	3.51	6.33	7.74
Weight (kg/m)	14.13	20.23	24.27	12.14	13.15	19.30	32.03	38.40
Water Contents (l/m)	1.81	2.77	3.23	2.64	2.70	3.10	5.17	6.20
Wall to tap centre (mm)	54	54	54	-	-	-	-	-
Floor standing	-	-	-	76	76	76	76	76

Stelrad Compact with Style Lo-Line

50 Δt (75/65/20°C)

P+

K2

Height	Length mm	Sections	Heat output P+ UIN	Watts	Btu/hr	Heat output K2 UIN	Watts	Btu/hr
200	500	15	7422105	242	826	7422205	307	1047
	1000	30	7422110	483	1648	7422210	614	2095
	1400	42	7422114	676	2307	7422214	860	2934
	2000	60	7422120	966	3296	7422220	1228	4190

Δt50 is the UK's industry standard for heating outputs, which has an operating temperature of 75/65/20°C if you a low temperature heat source you may wish to consider Δt40 or Δt30 output (see your installer or system designer).

Stelrad Compact with Style Lo-Line

40 Δt (65/55/20°C)

Height	Length mm	Sections	P+ Heat output UIN	P+ Watts	P+ Btu/hr	K2 Heat output UIN	K2 Watts	K2 Btu/hr
200	500	15	7422105	181	618	7422205	230	784
	1000	30	7422110	361	1233	7422210	459	1567
	1400	42	7422114	506	1725	7422214	643	2195
	2000	60	7422120	723	2465	7422220	919	3134

30 Δt (55/45/20°C)

Height	Length mm	Sections	P+ Heat output UIN	P+ Watts	P+ Btu/hr	K2 Heat output UIN	K2 Watts	K2 Btu/hr
200	500	15	7422105	125	425	7422205	158	539
	1000	30	7422110	249	849	7422210	316	1079
	1400	42	7422114	348	1188	7422214	443	1511
	2000	60	7422120	497	1697	7422220	632	2158

Stelrad Compact with Style Vertical

50 Δt (75/65/20°C)

Height	Length mm	Sections	P2 Heat output UIN	P2 Watts	P2 Btu/hr	K2 Heat output UIN	K2 Watts	K2 Btu/hr
1600	300	9	148140	693	2365	-	-	-
	500	15	148148	1155	3941	-	-	-
	600	18	148152	1386	4729	-	-	-
1800	300	9	148141	760	2593	-	-	-
	400	12	-	-	-	32182204	1476	5036
	500	15	148149	1266	4320	32182205	1845	6295
	600	18	148153	1519	5183	32182206	2214	7554
	700	21	-	-	-	32182207	2583	8813
2000	300	9	148142	824	2811	-	-	-
	400	12	-	-	-	32202204	1588	5405
	500	15	148150	1374	4688	32202205	1980	6756
	600	18	148154	1649	5626	32202206	2376	8107
	700	21	-	-	-	32202207	2772	9458
2200	300	9	148143	887	3026	32222203	1269	4330
	400	12	-	-	-	32222204	1692	5773
	500	15	148151	1479	5046	32222205	2115	7216
	600	18	148155	1775	6056	32222206	2538	8660

Δt50 is the UK's industry standard for heating outputs, which has an operating temperature of 75/65/20°C if you have a low temperature heat source you may wish to consider Δt40 or Δt30 output (see your installer or system designer).

Stelrad Compact with Style Vertical

40 Δt (65/55/20°C)

Height	Length mm	Sections	Heat output P2 UIN	Watts	Btu/hr	Heat output K2 UIN	Watts	Btu/hr
1600	300	9	148140	518	1769	-	-	-
	500	15	148148	863	2947	-	-	-
	600	18	148152	1036	3537	-	-	-
1800	300	9	148141	568	1940	-	-	-
	400	12	-	-	-	32182204	1104	3767
	500	15	148149	947	3231	32182205	1380	4709
	600	18	148153	1136	3877	32182206	1656	5651
	700	21	-	-	-	32182207	1932	6592
2000	300	9	148142	616	2103	-	-	-
	400	12	-	-	-	32202204	1188	4043
	500	15	148150	1028	3507	32202205	1481	5053
	600	18	148154	1233	4210	32202206	1777	6064
	700	21	-	-	-	32202207	2073	7075
2200	300	9	148143	663	2263	32222203	949	3239
	400	12	-	-	-	32222204	1266	4318
	500	15	148151	1106	3774	32222205	1582	5398
	600	18	148155	1328	4530	32222206	1898	6477

30 Δt (55/45/20°C)

Height	Length mm	Sections	Heat output P2 UIN	Watts	Btu/hr	Heat output K2 UIN	Watts	Btu/hr
1600	300	9	148140	356	1217	-	-	-
	500	15	148148	594	2029	-	-	-
	600	18	148152	713	2435	-	-	-
1800	300	9	148141	391	1335	-	-	-
	400	12	-	-	-	32182204	760	2594
	500	15	148149	652	2225	32182205	950	3242
	600	18	148153	782	2669	32182206	1140	3890
	700	21	-	-	-	32182207	1330	4539
2000	300	9	148142	424	1448	-	-	-
	400	12	-	-	-	32202204	818	2784
	500	15	148150	708	2414	32202205	1020	3479
	600	18	148154	849	2897	32202206	1224	4175
	700	21	-	-	-	32202207	1428	4871
2200	300	9	148143	457	1558	32222203	654	2230
	400	12	-	-	-	32222204	871	2973
	500	15	148151	762	2599	32222205	1089	3716
	600	18	148155	914	3119	32222206	1307	4460

EN 442 Certification Data – CETIAT tested in accordance with BS EN 442

Type	P2				K2			
Height	1600	1800	2000	2200	1600	1800	2000	2200
W/m at 75/65/20	2310	2532	2748	2958	3420	3690	3960	4230
n-coefficients	1.27	1.27	1.27	1.27	1.32	1.32	1.33	1.33
Heated Surface Area (m^2/m)	7.33	8.25	9.17	10.09	28.99	29.90	37.74	38.66
Weight (kg/m)	77.70	86.70	95.40	105.60	94.20	105.30	116.40	126.60
Water Contents (l/m)	14.10	16.20	18.30	20.10	14.10	15.90	17.70	20.10
Wall to tap centre (mm)	65	65	65	65	77	77	77	77

Compact with Style 300mm, 500mm & 600mm wall mounting information

All dimensions in mm. Inches in brackets. Floor mounting brackets available. See page 42.

K1

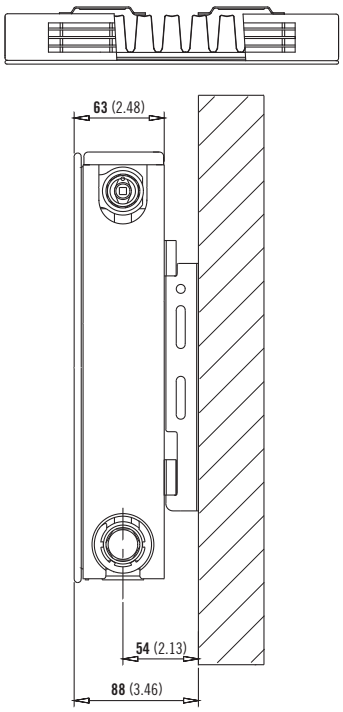

K2

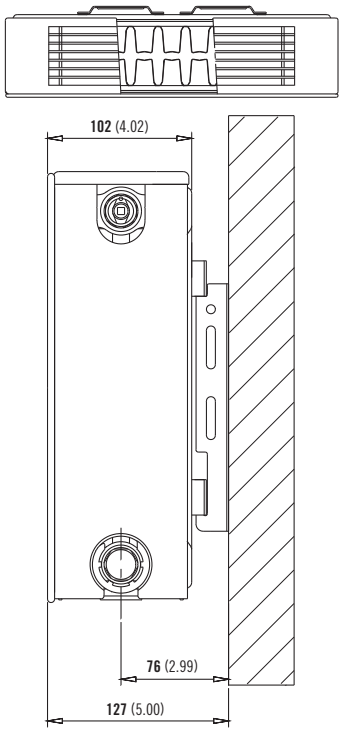

Compact with Style piping options

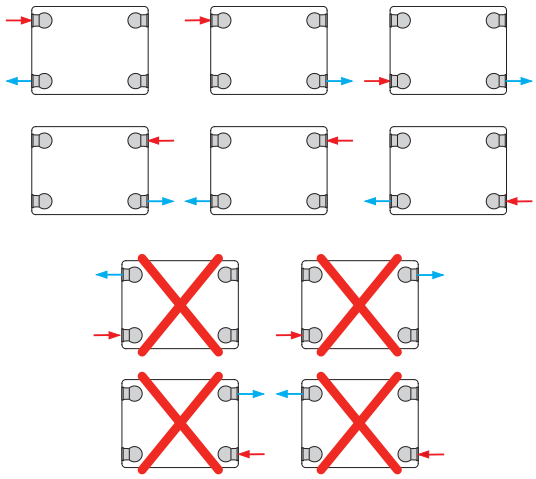

K1 and K2 lug positions

All dimensions in mm. Inches in brackets.

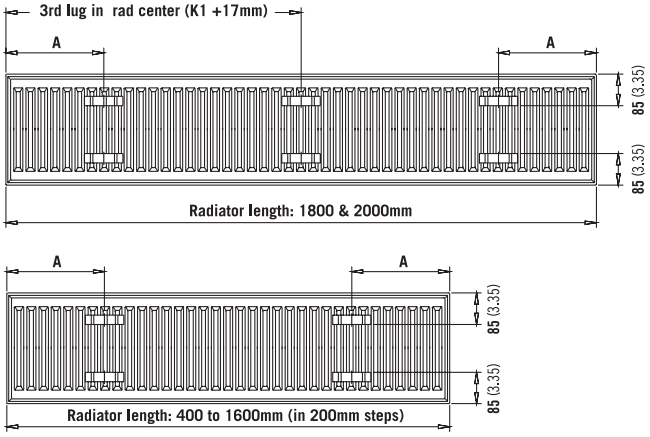

A

	K1		K2	
Length	mm	in	mm	in
400mm	117	4.61	133	5.24
500 - 1000mm	150	5.91	133	5.24
1200 - 16000mm	283	11.14	267	10.51
1800 - 2000mm	3rd lug in rad. centre*			

*K1 + 17mm

Pressure drops

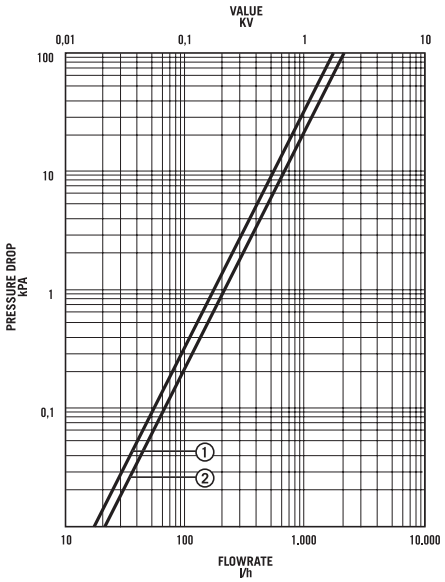

1 Type 10 (P1), 11 (K1)
2 Type 21 (P+), 22 (K2)

Compact with Style Lo-Line panel information

All dimensions in mm. Inches in brackets.

P+ and K2

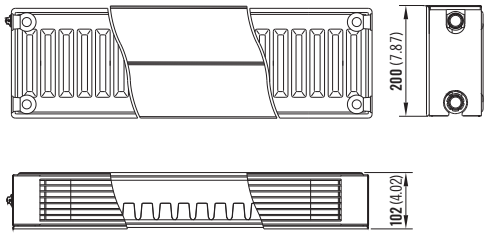

Compact with Style piping options

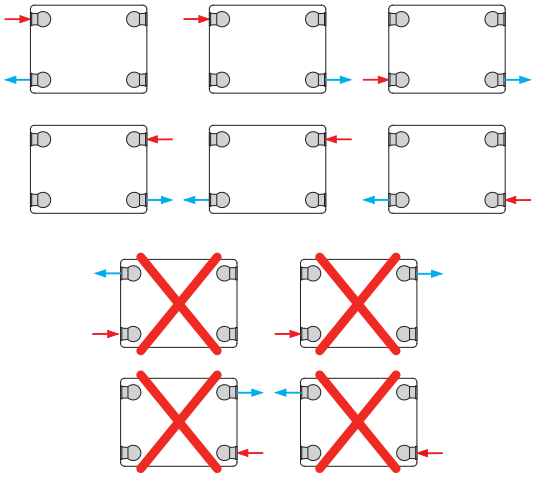

Compact with Style Lo-Line floor mounting information

All dimensions in mm. Inches in brackets.

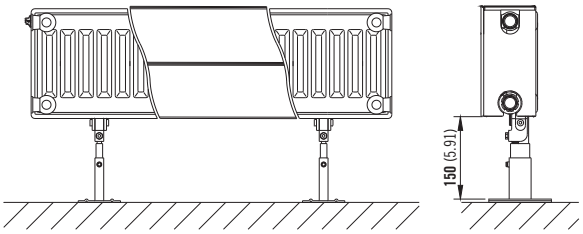

Floor mounting bracket comes as standard (200mm only)

Compact with Style Vertical mounted brackets and piping options

Height		H2		H3		H4	
mm	in	mm	in	mm	in	mm	in
1600	63	70	2.75	730	36.02	1390	55.71
1800	70.9	70	2.75	830	43.89	1590	63.58
2000	78.7	70	2.75	930	47.83	1790	71.46
2200	86.6	70	2.75	1030	51.77	1990	79.33

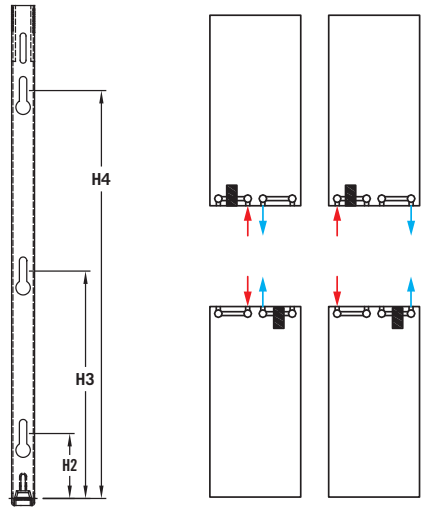

Compact with Style Vertical wall mounting information

All dimensions in mm. Inches in brackets.

P2

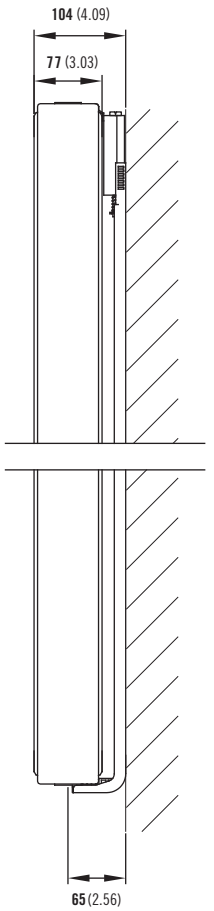

K2

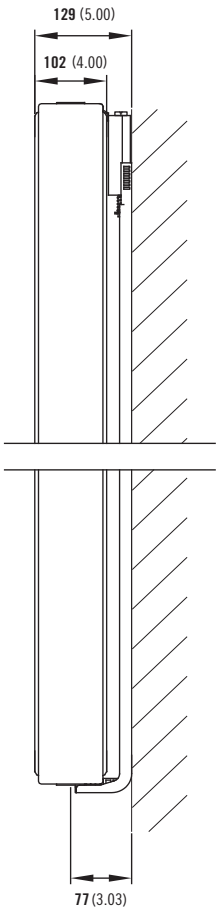

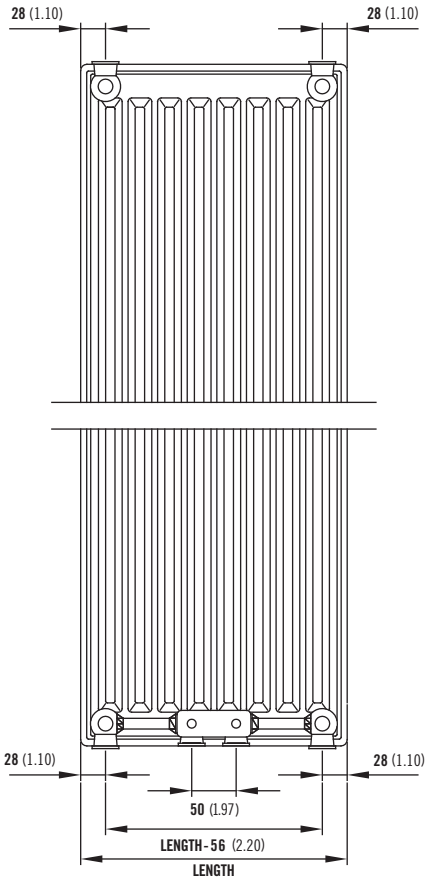

STARS

STELRAD'S ADVANCED HEATLOSS CALCULATOR

The Stelrad STARS Heatloss Calculator contains an inbuilt U value calculator.

Save time and effort by using the Stelrad STARS program - the perfect solution for accurate sizing and design flexibility.

Visit www.starsapp.co.uk

Stelrad Planar Range

50Δt (75/65/20°C)

K1

K2

Height	Length mm	Sections	K1 UIN	K1 Heat output Watts	K1 Heat output Btu/hr	K2 UIN	K2 Heat output Watts	K2 Heat output Btu/hr
300	500	15	140900	235	802	140904	465	1587
	1000	30	140901	469	1600	140905	929	3170
	1400	42	140902	657	2242	140906	1301	4439
	2000	60	140903	938	3200	140907	1858	6339
400	400	12	140908	250	853	140917	471	1607
	600	18	140909	376	1283	140918	706	2409
	800	24	140910	501	1709	140919	942	3214
	1000	30	140911	626	2136	140920	1177	4016
	1200	36	140912	751	2562	140921	1412	4818
	1400	42	140913	876	2989	140922	1648	5623
	1600	48	140914	1002	3419	140923	1883	6425
	1800	54	140915	1127	3845	140924	2119	7230
	2000	60	140916	1252	4272	140925	2354	8032
500	400	12	140926	310	1058	140935	564	1924
	600	18	140927	464	1583	140936	847	2890
	800	24	140928	619	2112	140937	1129	3852
	1000	30	140929	774	2641	140938	1411	4814
	1200	36	140930	929	3170	140939	1693	5777
	1400	42	140931	1084	3699	140940	1975	6739
	1600	48	140932	1238	4224	140941	2258	7704
	1800	54	140933	1393	4753	140942	2540	8666
	2000	60	140934	1548	5282	140943	2822	9629
	2200	66	141100	1702	5812	141105	3105	10595
	2400	72	141101	1858	6341	141106	3386	11556
	2600	78	141102	2013	6871	141107	3668	12518
	2800	84	141103	2168	7394	141108	3950	13486
	3000	90	141104	2321	7924	141109	4234	14448
600	400	12	140944	364	1242	140953	654	2231
	600	18	140945	547	1866	140954	980	3344
	800	24	140946	729	2487	140955	1307	4459
	1000	30	140947	911	3108	140956	1634	5575
	1200	36	140948	1093	3729	140957	1961	6691
	1400	42	140949	1275	4350	140958	2288	7807
	1600	48	140950	1458	4975	140959	2614	8919
	1800	54	140951	1640	5596	140960	2941	10035
	2000	60	140952	1822	6217	140961	3268	11150
	2200	66	141110	2005	6840	141115	3594	12269
	2400	72	141111	2186	7461	141116	3922	13386
	2600	78	141112	2368	8081	141117	4249	14502
	2800	84	141113	2550	8708	141118	4576	15613
	3000	90	141114	2734	9329	141119	4901	16729
700	400	12	140974	415	1416	140983	739	2521
	600	18	140975	623	2126	140984	1109	3783
	800	30	140976	830	2832	140985	1478	5044
	1000	36	140977	1038	3542	140986	1848	6305
	1200	42	140978	1246	4251	140987	2218	7566
	1400	48	140979	1453	4958	140988	2587	8828
	1600	54	140980	1661	5667	140989	2957	10089
	1800	60	140981	1868	6374	140990	3326	11350
	2000	66	140982	2076	7083	140991	3696	12611

Please note: All products over 2 metres wide will take 6 weeks to be delivered from date of order. When this product is ordered it cannot be cancelled.

Δt50 is the UK's industry standard for heating outputs, which has an operating temperature of 75/65/20°C if you have a low temperature heat source you may wish to consider Δt40 or Δt30 output (see your installer or system designer).

Stelrad Planar Range

40Δt (65/55/20°C)

Height	Length mm	Sections	K1 UIN	K1 Heat output Watts	K1 Heat output Btu/hr	K2 UIN	K2 Heat output Watts	K2 Heat output Btu/hr
300	500	15	140900	176	600	140904	348	1187
	1000	30	140901	351	1197	140905	695	2371
	1400	42	140902	491	1677	140906	973	3320
	2000	60	140903	702	2394	140907	1390	4742
400	400	12	140908	187	638	140917	352	1202
	600	18	140909	281	960	140918	528	1802
	800	24	140910	375	1279	140919	705	2404
	1000	30	140911	468	1598	140920	880	3004
	1200	36	140912	562	1917	140921	1056	3604
	1400	42	140913	655	2236	140922	1233	4206
	1600	48	140914	749	2557	140923	1408	4806
	1800	54	140915	843	2876	140924	1585	5408
	2000	60	140916	936	3195	140925	1761	6008
500	400	12	140926	232	791	140935	422	1439
	600	18	140927	347	1184	140936	634	2162
	800	24	140928	463	1580	140937	844	2881
	1000	30	140929	579	1975	140938	1055	3601
	1200	36	140930	695	2371	140939	1266	4321
	1400	42	140931	811	2767	140940	1477	5041
	1600	48	140932	926	3160	140941	1689	5763
	1800	54	140933	1042	3555	140942	1900	6483
	2000	60	140934	1158	3951	140943	2111	7202
	2200	66	141100	1274	4346	141105	2322	7922
	2400	72	141101	1390	4742	141106	2533	8642
	2600	78	141102	1505	5135	141107	2744	9364
	2800	84	141103	1621	5531	141108	2955	10084
	3000	90	141104	1737	5926	141109	3166	10803
600	400	12	140944	272	929	140953	489	1669
	600	18	140945	409	1396	140954	733	2501
	800	24	140946	545	1861	140955	978	3336
	1000	30	140947	681	2325	140956	1222	4170
	1200	36	140948	818	2790	140957	1467	5005
	1400	42	140949	954	3254	140958	1711	5839
	1600	48	140950	1091	3721	140959	1955	6671
	1800	54	140951	1227	4186	140960	2200	7506
	2000	60	140952	1363	4650	140961	2444	8341
	2200	66	141110	1499	5115	141115	2689	9175
	2400	72	141111	1635	5579	141116	2934	10010
	2600	78	141112	1772	6046	141117	3178	10842
	2800	84	141113	1908	6511	141118	3422	11676
	3000	90	141114	2044	6975	141119	3667	12511
700	400	12	140974	310	1059	140983	546	1861
	600	18	140975	466	1590	140984	829	2830
	800	30	140976	621	2118	140985	1106	3773
	1000	36	140977	776	2649	140986	1382	4716
	1200	42	140978	932	3180	140987	1659	5660
	1400	48	140979	1087	3708	140988	1935	6603
	1600	54	140980	1242	4239	140989	2212	7546
	1800	60	140981	1397	4767	140990	2488	8490
	2000	66	140982	1553	5298	140991	2765	9433

Please note: All products over 2 metres wide will take 6 weeks to be delivered from date of order. When this product is ordered it cannot be cancelled.

Stelrad Planar Range

30Δt (55/45/20°C)

K1

K2

Height	Length mm	Sections	K1 UIN	K1 Heat output Watts	K1 Heat output Btu/hr	K2 UIN	K2 Heat output Watts	K2 Heat output Btu/hr
300	500	15	140900	121	413	140904	239	817
	1000	30	140901	242	824	140905	478	1632
	1400	42	140902	338	1154	140906	670	2286
	2000	60	140903	483	1648	140907	957	3265
400	400	12	140908	129	439	140917	243	828
	600	18	140909	194	661	140918	364	1241
	800	24	140910	258	880	140919	485	1655
	1000	30	140911	322	1100	140920	606	2068
	1200	36	140912	387	1320	140921	727	2481
	1400	42	140913	451	1539	140922	849	2896
	1600	48	140914	516	1761	140923	970	3309
	1800	54	140915	580	1980	140924	1091	3723
	2000	60	140916	645	2200	140925	1212	4136
500	400	12	140926	160	545	140935	290	991
	600	18	140927	239	815	140936	436	1488
	800	24	140928	319	1088	140937	581	1984
	1000	30	140929	399	1360	140938	727	2479
	1200	36	140930	478	1632	140939	872	2975
	1400	42	140931	558	1905	140940	1017	3470
	1600	48	140932	638	2175	140941	1163	3968
	1800	54	140933	717	2448	140942	1308	4463
	2000	60	140934	797	2720	140943	1453	4959
	2200	66	141100	877	2992	141105	1599	5454
	2400	72	141101	957	3265	141106	1744	5950
	2600	78	141102	1036	3535	141107	1890	6447
	2800	84	141103	1116	3808	141108	2035	6943
	3000	90	141104	1196	4080	141109	2180	7438
600	400	12	140944	187	640	140953	337	1149
	600	18	140945	282	961	140954	505	1722
	800	24	140946	375	1281	140955	673	2297
	1000	30	140947	469	1601	140956	842	2871
	1200	36	140948	563	1921	140957	1010	3446
	1400	42	140949	657	2240	140958	1178	4020
	1600	48	140950	751	2562	140959	1346	4593
	1800	54	140951	845	2882	140960	1515	5168
	2000	60	140952	938	3202	140961	1683	5742
	2200	66	141110	1032	3521	141115	1851	6317
	2400	72	141111	1126	3841	141116	2020	6892
	2600	78	141112	1220	4163	141117	2188	7465
	2800	84	141113	1314	4483	141118	2356	8039
	3000	90	141114	1407	4802	141119	2525	8614
700	400	12	140974	214	729	140983	381	1282
	600	18	140975	321	1095	140984	571	1948
	800	30	140976	427	1458	140985	761	2598
	1000	36	140977	535	1824	140986	952	3247
	1200	42	140978	642	2189	140987	1142	3897
	1400	48	140979	748	2553	140988	1332	4546
	1600	54	140980	855	2919	140989	1523	5196
	1800	60	140981	962	3282	140990	1713	5845
	2000	66	140982	1069	3648	140991	1903	6495

Please note: All products over 2 metres wide will take 6 weeks to be delivered from date of order. When this product is ordered it cannot be cancelled.

Stelrad Planar Range

EN 442 Certification Data - CETIAT tested in accordance with BS EN 442

Type	K1					K2				
Height	300	400	500	600	700	300	400	500	600	700
W/m at 75/65/20	469	629	774	911	1038	929	1177	1411	1634	1848
n-coefficients	1.30	1.29	1.28	1.27	1.27	1.29	1.30	1.31	1.32	1.33
Heated Surface Area (m²/m)	2.09	2.95	3.80	4.66	5.51	3.51	4.92	6.33	7.74	9.15
Weight (kg/m)	11.88	16.13	20.39	24.65	28.91	19.60	26.40	33.20	40.00	46.80
Water contents (l/m)	1.89	2.34	2.80	3.25	3.77	3.70	4.67	5.63	6.60	7.63
Wall to tap centre (mm)	54	54	54	54	54	76	76	76	76	76

Stelrad Planar Vertical

K2

50 Δt (75/65/20°C)

Height	Length mm	Sections	Heat output UIN	Watts	Btu/hr
1800	400	12	30182204	1476	5036
	500	15	30182205	1845	6295
	600	18	30182206	2214	7554
	700	21	30182207	2583	8813
2000	400	12	30202204	1584	5405
	500	15	30202205	1980	6756
	600	18	30202206	2376	8107
	700	21	30202207	2772	9458
2200	400	12	30222204	1692	5773
	500	15	30222205	2115	7216
	600	18	30222206	2538	8660
	700	21	30222207	2961	10103

Δt50 is the UK's industry standard for heating outputs, which has an operating temperature of 75/65/20°C if you have a low temperature heat source you may wish to consider Δt40 or Δt30 output (see your installer or system designer).

K2

40 Δt (65/55/20°C) 30 Δt (55/45/20°C)

Height	Length mm	Sections	Heat output UIN	Watts	Btu/hr	Heat output UIN	Watts	Btu/hr
1800	400	12	30182204	1104	3767	30182204	760	2594
	500	15	30182205	1380	4709	30182205	950	3242
	600	18	30182206	1656	5651	30182206	1140	3890
	700	21	30182207	1932	6592	30182207	1330	4539
2000	400	12	30202204	1185	4043	30202204	816	2783
	500	15	30202205	1481	5053	30202205	1020	3479
	600	18	30202206	1777	6064	30202206	1224	4175
	700	21	30202207	2073	7075	30202207	1428	4871
2200	400	12	30222204	1266	4318	30222204	871	2973
	500	15	30222205	1582	5398	30222205	1089	3716
	600	18	30222206	1898	6477	30222206	1307	4460
	700	21	30222207	2215	7557	30222207	1525	5203

EN 442 Certification Data – CETIAT tested in accordance with BS EN 442

Type	K2		
Height	1800	2000	2200
W/m at 75/65/20	3690	3960	4230
n-coefficients	1.32	1.33	1.33
Heated Surface Area (m²/m)	29.90	37.74	38.66
Weight (kg/m)	105.30	116.40	126.60
Water Contents (l/m)	15.90	17.70	20.10
Wall to tap centre (mm)	77	77	77

Planar Horizontal mounting brackets

All dimensions in mm. Inches in brackets.

Floor mounting brackets available. See page 42.

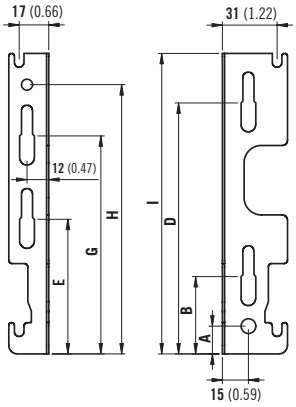

K1 and K2
(300mm)

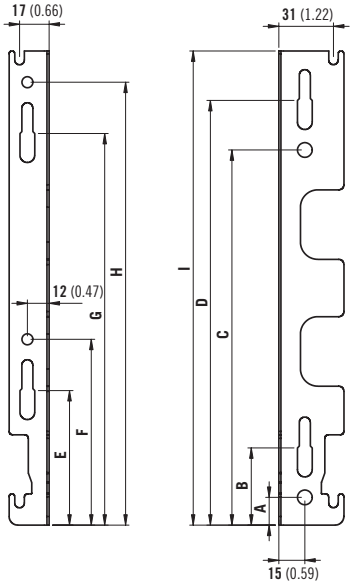

K1 and K2
(400, 500 & 600mm)

Dimensions	mm	in	mm	in	mm	in	mm	in
	300	11.81	400	15.75	500	19.69	600	23.62
A	16	0.62	16	0.62	16	0.62	16	0.62
B	44	1.73	44	1.73	44	1.73	44	1.73
C	-	-	216	8.50	316	12.44	416	16.37
D	144	5.66	244	9.60	344	13.54	444	17.48
E	77	3.03	77	3.03	77	3.03	77	3.03
F	-	-	107	4.21	107	4.21	107	4.21
G	125	4.92	225	8.85	325	12.79	425	16.73
H	155	6.10	255	10.03	355	13.97	455	17.91
I	173	6.81	273	10.74	373	14.68	473	18.62

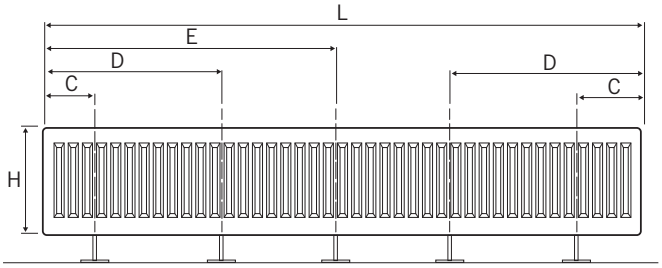

	L	400	500 - 1100	1200	1400 - 1800	2000 - 3000
H	Number	2pc				3pc
300	**C**	117	150	250	250	250
500	**E**	-	-	-	-	L/2+17

	L	400	500 - 1100	1200	1400 - 1800	2000	2200	2400	2600	2800	3000
H	Number	2pc			3pc	4pc			5pc		
600	**C**	117	150	250	250	250			250		
700	**D**	-	-	-	-	750	817	850	750	817	850
	E	-	-	-	817	-	-	-	L/2+17		

K1 and K2 lug positions

All dimensions in mm. Inches in brackets.

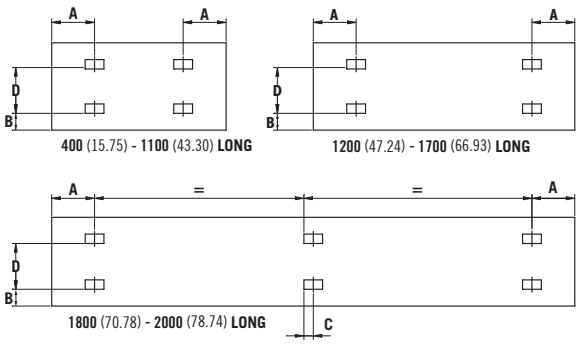

Dimensions		K1 mm	K1 in
A	400mm	117	4.61
A	500 - 1100mm	150	5.91
A	1200 - 2000mm	283	11.14
B	All	60	2.36
C	1800 - 3000mm	17	0.67

Dimensions		K2 mm	K2 in
A	400 - 1100mm	133	5.24
A	1200 - 2000mm	267	10.50
B	All	60	2.36

Panel Height mm	Panel Height in	D mm	D in
300	11.81	155	6.10
400	15.75	255	10.04
500	19.69	355	13.98
600	23.62	455	17.93

Planar wall mounting information

All dimensions in mm. Inches in brackets.

K1

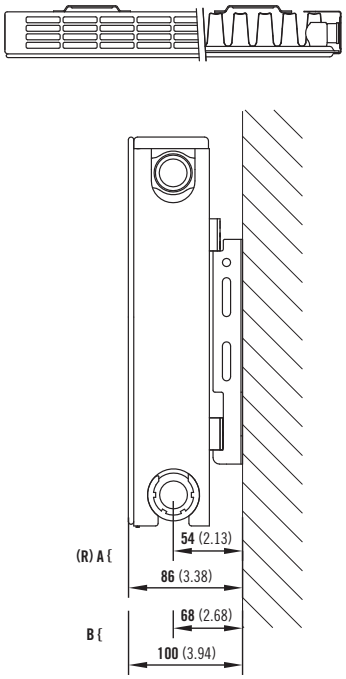

K2

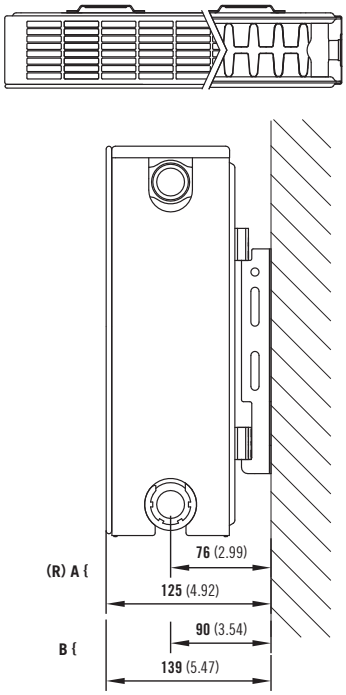

Planar bracket position

A = Closest to Wall B = Furthest from Wall (R) = Recommended Mounting Position

Pressure drops

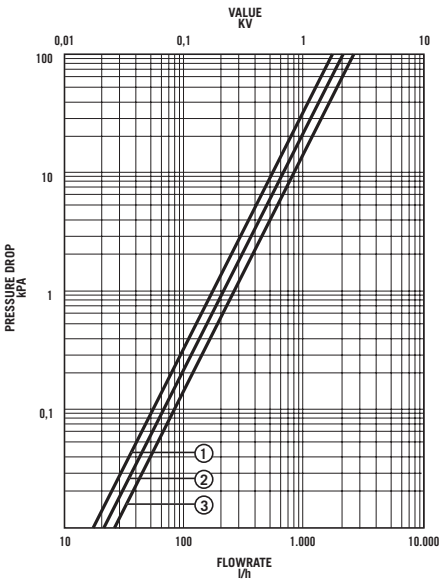

1 Type 10 (P1), 11 (K1)
2 Type 21 (P+), 22 (K2)
3 Type 33 (K3)

Planar Vertical mounting brackets

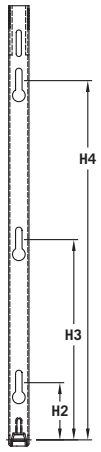

Height		H2		H3		H4	
mm	in	mm	in	mm	in	mm	in
1800	70.87	70	2.75	830	43.89	1590	63.58
2000	78.74	70	2.75	930	47.83	1790	71.46
2200	86.61	70	2.75	1030	51.77	1900	79.33

Planar piping options

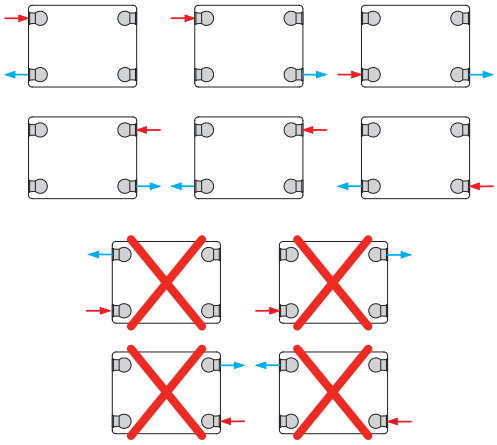

Planar Vertical wall mounting information

All dimensions in mm. Inches in brackets.

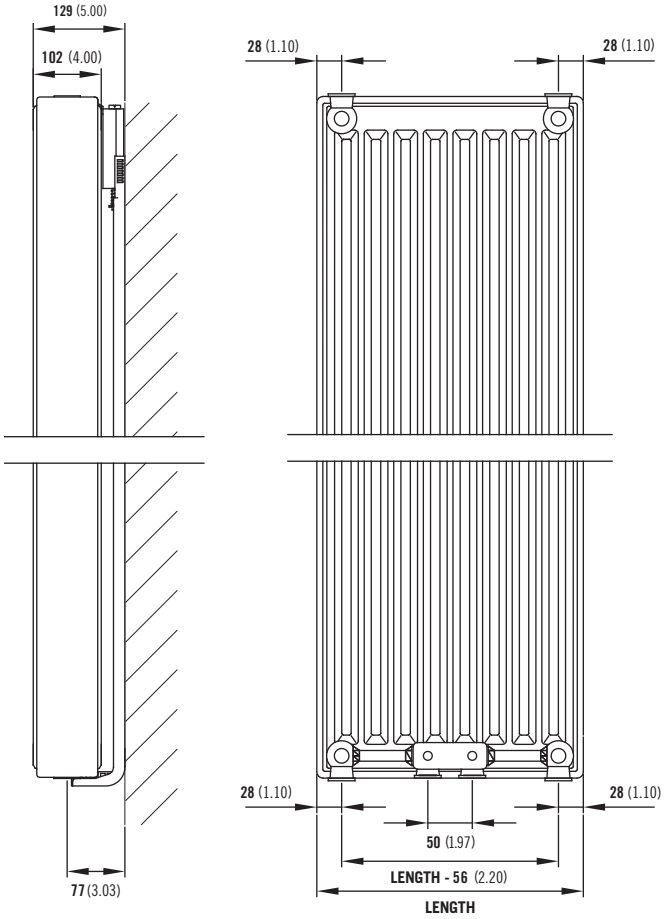

Comes complete with Stelrad's class leading safety bracket.

Stelrad Concord Range

Lo-Line

50 Δt (75/65/20°C)

Lo-Line | Single | Double

Height	Length mm	Elements	Lo-Line UIN	Lo-Line Watts	Lo-Line Btu/hr	Single UIN	Single Watts	Single Btu/hr	Double UIN	Double Watts	Double Btu/hr
144	800	2	148308	530	1809	-	-	-	-	-	-
	1000	2	148309	663	2263	-	-	-	-	-	-
	1200	2	148310	796	2717	-	-	-	-	-	-
	1400	2	148311	928	3167	-	-	-	-	-	-
	1600	2	148312	1061	3621	-	-	-	-	-	-
	1800	2	148313	1193	4071	-	-	-	-	-	-
	2000	2	148314	1326	4525	-	-	-	-	-	-
	2200	2	148315	1459	4979	-	-	-	-	-	-
292	800	4	148316	898	3065	-	-	-	-	-	-
	1000	4	148317	1122	3829	-	-	-	-	-	-
	1200	4	148318	1346	4594	-	-	-	-	-	-
	1400	4	148319	1571	5362	-	-	-	-	-	-
	1600	4	148320	1795	6126	-	-	-	-	-	-
	1800	4	148321	2020	6894	-	-	-	-	-	-
	2000	4	148322	2244	7658	-	-	-	-	-	-
	2200	4	148323	2468	8423	-	-	-	-	-	-
440	500	6	-	-	-	148346	382	1303	148397	673	2296
	600	6	-	-	-	148347	458	1563	148398	808	2757
	700	6	-	-	-	148348	535	1826	148399	942	3214
	800	6	-	-	-	148349	611	2085	148400	1077	3675
	900	6	-	-	-	148350	688	2348	148401	1211	4132
	1000	6	-	-	-	148351	764	2607	148402	1346	4593
	1100	6	-	-	-	148352	840	2867	148403	1481	5053
	1200	6	-	-	-	148353	917	3130	148404	1615	5512
	1400	6	-	-	-	148354	1070	3651	148405	1884	6430
	1600	6	-	-	-	148355	1222	4170	148406	2154	7351
	1800	6	-	-	-	148356	1375	4692	148407	2423	8267
	2000	6	-	-	-	148357	1528	5215	148408	2692	9187
	2200	6	-	-	-	148358	1681	5736	148409	2961	10104
	2400	6	-	-	-	148359	1834	6258	148410	3230	11023
	2600	6	-	-	-	148360	1986	6778	148411	3500	11945
	2800	6	-	-	-	148361	2139	7298	148412	3769	12863
	3000	6	-	-	-	148362	2292	7822	148413	4038	13781
588	500	8	-	-	-	148363	500	1706	148414	827	2822
	600	8	-	-	-	148364	599	2044	148415	992	3385
	700	8	-	-	-	148365	699	2385	148416	1158	3951
	800	8	-	-	-	148366	799	2726	148417	1323	4514
	900	8	-	-	-	148367	899	3067	148418	1489	5082
	1000	8	-	-	-	148368	999	3409	148419	1654	5643
	1100	8	-	-	-	148369	1099	3750	148420	1819	6206
	1200	8	-	-	-	148370	1199	4091	148421	1985	6773
	1400	8	-	-	-	148371	1399	4775	148422	2316	7902
	1600	8	-	-	-	148372	1598	5454	148423	2646	9028
	1800	8	-	-	-	148373	1798	6135	148424	2977	10158
	2000	8	-	-	-	148374	1998	6819	148425	3308	11287
	2200	8	-	-	-	148375	2198	7500	148426	3639	12416
	2400	8	-	-	-	148376	2398	8182	148427	3970	13549
	2600	8	-	-	-	148377	2597	8863	148428	4300	14672
	2800	8	-	-	-	148378	2797	9546	148429	4631	15801
	3000	8	-	-	-	148379	2997	10226	148430	4962	16934
736	500	10	-	-	-	148380	606	2068	148431	1046	3569
	600	10	-	-	-	148381	727	2481	148432	1255	4282
	700	10	-	-	-	148382	848	2893	148433	1464	4995
	800	10	-	-	-	148383	970	3310	148434	1674	5712
	900	10	-	-	-	148384	1091	3722	148435	1883	6425
	1000	10	-	-	-	148385	1212	4135	148436	2092	7138
	1100	10	-	-	-	148386	1333	4548	148437	2301	7851
	1200	10	-	-	-	148387	1454	4961	148438	2510	8564
	1400	10	-	-	-	148388	1697	5792	148439	2929	9994
	1600	10	-	-	-	148389	1939	6616	148440	3347	11420
	1800	10	-	-	-	148390	2182	7447	148441	3766	12850
	2000	10	-	-	-	148391	2424	8275	148442	4184	14276
	2200	10	-	-	-	148392	2666	9099	148443	4602	15702
	2400	10	-	-	-	148393	2909	9928	148444	5021	17132
	2600	10	-	-	-	148394	3151	10754	148445	5439	18558
	2800	10	-	-	-	148395	3394	11583	148446	5858	19987
	3000	10	-	-	-	148396	3636	12409	148447	6276	21419

Please note: All products over 2 metres wide will take 6 weeks to be delivered from date of order. When this product is ordered it cannot be cancelled.

Δt50 is the UK's industry standard for heating outputs, which has an operating temperature of 75/65/20°C if you have a low temperature heat source you may wish to consider Δt40 or Δt30 output (see your installer or system designer).

Stelrad Concord Range

Single

40 Δt (65/55/20°C)

Height	Length mm	Elements	Lo-Line Heat output UIN	Watts	Btu/hr	Single Heat output UIN	Watts	Btu/hr	Double Heat output UIN	Watts	Btu/hr
144	800	2	148308	396	1353	-	-	-	-	-	-
	1000	2	148309	496	1692	-	-	-	-	-	-
	1200	2	148310	595	2032	-	-	-	-	-	-
	1400	2	148311	694	2368	-	-	-	-	-	-
	1600	2	148312	794	2708	-	-	-	-	-	-
	1800	2	148313	892	3045	-	-	-	-	-	-
	2000	2	148314	992	3384	-	-	-	-	-	-
	2200	2	148315	1091	3724	-	-	-	-	-	-
292	800	4	148316	672	2292	-	-	-	-	-	-
	1000	4	148317	839	2864	-	-	-	-	-	-
	1200	4	148318	1007	3435	-	-	-	-	-	-
	1400	4	148319	1175	4009	-	-	-	-	-	-
	1600	4	148320	1343	4581	-	-	-	-	-	-
	1800	4	148321	1511	5155	-	-	-	-	-	-
	2000	4	148322	1679	5727	-	-	-	-	-	-
	2200	4	148323	1846	6299	-	-	-	-	-	-
440	500	6	-	-	-	148346	286	975	148397	503	1718
	600	6	-	-	-	148347	343	1169	148398	604	2062
	700	6	-	-	-	148348	400	1365	148399	705	2404
	800	6	-	-	-	148349	457	1559	148400	806	2749
	900	6	-	-	-	148350	515	1756	148401	906	3091
	1000	6	-	-	-	148351	571	1950	148402	1007	3435
	1100	6	-	-	-	148352	628	2144	148403	1108	3780
	1200	6	-	-	-	148353	686	2340	148404	1208	4122
	1400	6	-	-	-	148354	800	2731	148405	1409	4808
	1600	6	-	-	-	148355	914	3119	148406	1611	5497
	1800	6	-	-	-	148356	1029	3510	148407	1812	6184
	2000	6	-	-	-	148357	1143	3900	148408	2014	6870
	2200	6	-	-	-	148358	1257	4290	148409	2215	7557
	2400	6	-	-	-	148359	1372	4681	148410	2416	8244
	2600	6	-	-	-	148360	1486	5069	148411	2618	8933
	2800	6	-	-	-	148361	1600	5459	148412	2819	9619
	3000	6	-	-	-	148362	1714	5850	148413	3020	10306
588	500	8	-	-	-	148363	374	1276	148414	619	2111
	600	8	-	-	-	148364	448	1529	148415	742	2532
	700	8	-	-	-	148365	523	1784	148416	866	2955
	800	8	-	-	-	148366	598	2039	148417	990	3377
	900	8	-	-	-	148367	672	2294	148418	1114	3800
	1000	8	-	-	-	148368	747	2550	148419	1237	4221
	1100	8	-	-	-	148369	822	2805	148420	1361	4642
	1200	8	-	-	-	148370	897	3060	148421	1485	5066
	1400	8	-	-	-	148371	1046	3570	148422	1732	5911
	1600	8	-	-	-	148372	1195	4078	148423	1979	6753
	1800	8	-	-	-	148373	1345	4589	148424	2227	7598
	2000	8	-	-	-	148374	1495	5099	148425	2474	8443
	2200	8	-	-	-	148375	1644	5610	148426	2722	9287
	2400	8	-	-	-	148376	1794	6120	148427	2970	10132
	2600	8	-	-	-	148377	1943	6628	148428	3216	10974
	2800	8	-	-	-	148378	2092	7138	148429	3464	11819
	3000	8	-	-	-	148379	2242	7649	148430	3712	12664
736	500	10	-	-	-	148380	453	1547	148431	782	2670
	600	10	-	-	-	148381	544	1855	148432	939	3203
	700	10	-	-	-	148382	634	2164	148433	1095	3736
	800	10	-	-	-	148383	726	2476	148434	1252	4272
	900	10	-	-	-	148384	816	2784	148435	1408	4806
	1000	10	-	-	-	148385	907	3093	148436	1565	5339
	1100	10	-	-	-	148386	997	3402	148437	1721	5873
	1200	10	-	-	-	148387	1088	3711	148438	1877	6406
	1400	10	-	-	-	148388	1269	4331	148439	2191	7475
	1600	10	-	-	-	148389	1450	4949	148440	2504	8542
	1800	10	-	-	-	148390	1632	5569	148441	2817	9611
	2000	10	-	-	-	148391	1813	6186	148442	3130	10678
	2200	10	-	-	-	148392	1994	6804	148443	3442	11745
	2400	10	-	-	-	148393	2176	7424	148444	3756	12814
	2600	10	-	-	-	148394	2357	8042	148445	4068	13881
	2800	10	-	-	-	148395	2539	8662	148446	4382	14951
	3000	10	-	-	-	148396	2720	9280	148447	4694	16017

Please note: All products over 2 metres wide will take 6 weeks to be delivered from date of order. When this product is ordered it cannot be cancelled.

Stelrad Concord Range

Double

30 Δt (55/45/20°C)

Lo-Line

Single

Double

Height	Length mm	Elements	Lo-Line UIN	Lo-Line Watts	Lo-Line Btu/hr	Single UIN	Single Watts	Single Btu/hr	Double UIN	Double Watts	Double Btu/hr
144	800	2	148308	273	931	-	-	-	-	-	-
	1000	2	148309	341	1165	-	-	-	-	-	-
	1200	2	148310	410	1399	-	-	-	-	-	-
	1400	2	148311	478	1631	-	-	-	-	-	-
	1600	2	148312	546	1864	-	-	-	-	-	-
	1800	2	148313	614	2096	-	-	-	-	-	-
	2000	2	148314	683	2330	-	-	-	-	-	-
	2200	2	148315	751	2564	-	-	-	-	-	-
292	800	4	148316	462	1578	-	-	-	-	-	-
	1000	4	148317	578	1972	-	-	-	-	-	-
	1200	4	148318	693	2365	-	-	-	-	-	-
	1400	4	148319	809	2761	-	-	-	-	-	-
	1600	4	148320	924	3154	-	-	-	-	-	-
	1800	4	148321	1040	3550	-	-	-	-	-	-
	2000	4	148322	1156	3943	-	-	-	-	-	-
	2200	4	148323	1271	4337	-	-	-	-	-	-
440	500	6	-	-	-	148346	197	671	148397	347	1183
	600	6	-	-	-	148347	236	805	148398	416	1420
	700	6	-	-	-	148348	276	940	148399	485	1655
	800	6	-	-	-	148349	315	1074	148400	555	1892
	900	6	-	-	-	148350	354	1209	148401	624	2128
	1000	6	-	-	-	148351	393	1342	148402	693	2365
	1100	6	-	-	-	148352	433	1476	148403	763	2602
	1200	6	-	-	-	148353	472	1611	148404	832	2838
	1400	6	-	-	-	148354	551	1880	148405	970	3311
	1600	6	-	-	-	148355	629	2147	148406	1109	3785
	1800	6	-	-	-	148356	708	2416	148407	1248	4258
	2000	6	-	-	-	148357	787	2685	148408	1386	4730
	2200	6	-	-	-	148358	866	2954	148409	1525	5203
	2400	6	-	-	-	148359	945	3223	148410	1663	5676
	2600	6	-	-	-	148360	1023	3490	148411	1803	6150
	2800	6	-	-	-	148361	1102	3759	148412	1941	6623
	3000	6	-	-	-	148362	1180	4027	148413	2080	7095
588	500	8	-	-	-	148363	258	879	148414	426	1453
	600	8	-	-	-	148364	308	1053	148415	511	1743
	700	8	-	-	-	148365	360	1228	148416	596	2035
	800	8	-	-	-	148366	411	1404	148417	681	2325
	900	8	-	-	-	148367	463	1580	148418	767	2616
	1000	8	-	-	-	148368	514	1755	148419	852	2906
	1100	8	-	-	-	148369	566	1931	148420	937	3196
	1200	8	-	-	-	148370	617	2107	148421	1022	3488
	1400	8	-	-	-	148371	720	2458	148422	1193	4070
	1600	8	-	-	-	148372	823	2808	148423	1363	4649
	1800	8	-	-	-	148373	926	3159	148424	1533	5231
	2000	8	-	-	-	148374	1029	3511	148425	1704	5813
	2200	8	-	-	-	148375	1132	3862	148426	1874	6394
	2400	8	-	-	-	148376	1235	4214	148427	2045	6976
	2600	8	-	-	-	148377	1337	4563	148428	2215	7556
	2800	8	-	-	-	148378	1440	4915	148429	2385	8138
	3000	8	-	-	-	148379	1543	5266	148430	2555	8719
736	500	10	-	-	-	148380	312	1065	148431	539	1838
	600	10	-	-	-	148381	374	1277	148432	646	2205
	700	10	-	-	-	148382	437	1490	148433	754	2573
	800	10	-	-	-	148383	500	1704	148434	862	2942
	900	10	-	-	-	148384	562	1917	148435	970	3309
	1000	10	-	-	-	148385	624	2130	148436	1077	3676
	1100	10	-	-	-	148386	686	2342	148437	1185	4043
	1200	10	-	-	-	148387	749	2555	148438	1293	4411
	1400	10	-	-	-	148388	874	2982	148439	1508	5147
	1600	10	-	-	-	148389	999	3407	148440	1724	5881
	1800	10	-	-	-	148390	1124	3834	148441	1939	6618
	2000	10	-	-	-	148391	1248	4259	148442	2155	7352
	2200	10	-	-	-	148392	1373	4685	148443	2370	8087
	2400	10	-	-	-	148393	1498	5112	148444	2586	8823
	2600	10	-	-	-	148394	1623	5537	148445	2801	9557
	2800	10	-	-	-	148395	1748	5964	148446	3017	10294
	3000	10	-	-	-	148396	1873	6389	148447	3232	11028

Please note: All products over 2 metres wide will take 6 weeks to be delivered from date of order. When this product is ordered it cannot be cancelled.

Stelrad Concord Range

Vertical

Vertical 50 Δt (75/65/20°C)

Height	Length mm	Elements	Heat output UIN	Watts	Btu/hr
1800	440	6	148340	780	2661
	588	8	148341	1040	3548
	736	10	148342	1300	4436
2000	440	6	148343	870	2968
	588	8	148344	1160	3958
	736	10	148345	1450	4947

Δt50 is the UK's industry standard for heating outputs, which has an operating temperature of 75/65/20°C if you have a low temperature heat source you may wish to consider Δt40 or Δt30 output (see your installer or system designer).

Vertical 40 Δt (65/55/20°C) 30 Δt (55/45/20°C)

Height	Length mm	Elements	Heat output UIN	Watts	Btu/hr	Heat output UIN	Watts	Btu/hr
1800	440	6	148340	583	1991	148340	402	1371
	588	8	148341	778	2654	148341	536	1827
	736	10	148342	972	3318	148342	670	2284
2000	440	6	148343	651	2220	148343	448	1529
	588	8	148344	868	2961	148344	597	2038
	736	10	148345	1085	3701	148345	747	2548

Concord Plane & Lo-Line
EN 442 Certification Data - CETIAT tested in accordance with BS EN 442

Type	Lo-Line		Single			Double		
Height	144	292	440	588	736	440	588	736
W/m at 75/65/20	663	1122	764	999	1212	1346	1654	2092
n-coefficients	1.23	1.28	1.27	1.29	1.29	1.31	1.34	1.34
Heated Surface Area (m²/m)	2.47	5.12	4.9	6.58	6.92	7.71	10.37	11.06
Weight (kg/m)	12.57	25.05	18.23	25.01	31.98	32.79	45.01	57.44
Water contents (l/m)	1.77	3.57	2.68	3.54	4.43	5.31	7.09	8.86
Wall to tap centre (mm)	44	94	44	44	44	94	94	94

Concord Vertical
EN 442 Certification Data - CETIAT tested in accordance with BS EN 442

Type	Vertical		Slimline	
Height	1800	2000	1800	2000
W/m at 75/65/20	1770	1972	2725	3056
n-coefficients	1.31	1.31	1.30	1.31
Heated Surface Area (m²/m)	3.95	4.36	6.9	7.65
Weight (kg/m)	45.14	49.77	77.81	78.5
Water Contents (l/m)	9.68	10.64	17.5	19.25
Wall to tap centre (mm)	44	44	50	50

Stelrad Concord Range

Slimline

Slimline 50 Δt (75/65/20°C)

Height	Length mm	Elements	Heat output UIN	Watts	Btu/hr
1800	320	8	148300	872	2975
	440	11	148301	1199	4091
	520	13	148302	1417	4835
	640	16	148303	1744	5951
2000	320	8	148304	978	3337
	440	11	148305	1344	4586
	520	13	148306	1589	5422
	640	16	148307	1956	6674

Δt50 is the UK's industry standard for heating outputs, which has an operating temperature of 75/65/20°C if you have a low temperature heat source you may wish to consider Δt40 or Δt30 output (see your installer or system designer).

Slimline 40 Δt (65/55/20°C) 30 Δt (55/45/20°C)

Height	Length mm	Elements	Heat output UIN	Watts	Btu/hr	Heat output UIN	Watts	Btu/hr
1800	320	8	148300	652	2225	148300	449	1532
	440	11	148301	897	3060	148301	617	2107
	520	13	148302	1060	3616	148302	730	2490
	640	16	148303	1305	4451	148303	898	3065
2000	320	8	148304	732	2496	148304	504	1719
	440	11	148305	1005	3430	148305	692	2362
	520	13	148306	1189	4055	148306	818	2792
	640	16	148307	1463	4992	148307	1007	3437

Concord Slimline

EN 442 Certification Data - CETIAT tested in accordance with BS EN 442

Type	Vertical		Slimline	
Height	1800	2000	1800	2000
W/m at 75/65/20	1770	1972	2725	3056
n-coefficients	1.31	1.31	1.30	1.31
Heated Surface Area (m²/m)	3.95	4.36	6.9	7.65
Weight (kg/m)	45.14	49.77	77.81	78.5
Water Contents (l/m)	9.68	10.64	17.5	19.25
Wall to tap centre (mm)	44	44	50	50

Concord Plane Single fixing positions

All dimensions in mm. Inches in brackets.

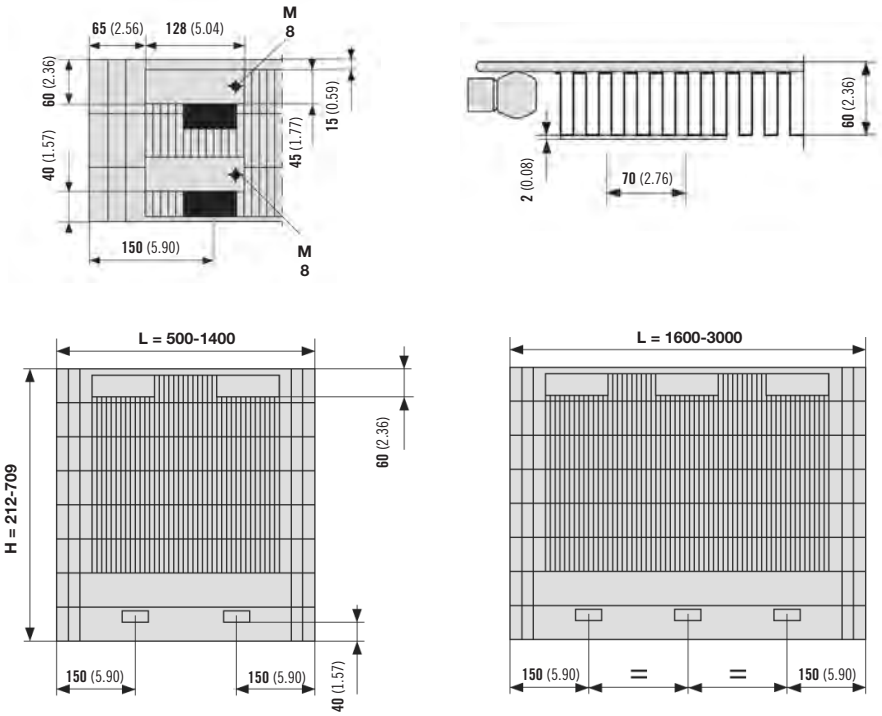

Concord Plane Double fixing positions

All dimensions in mm. Inches in brackets.

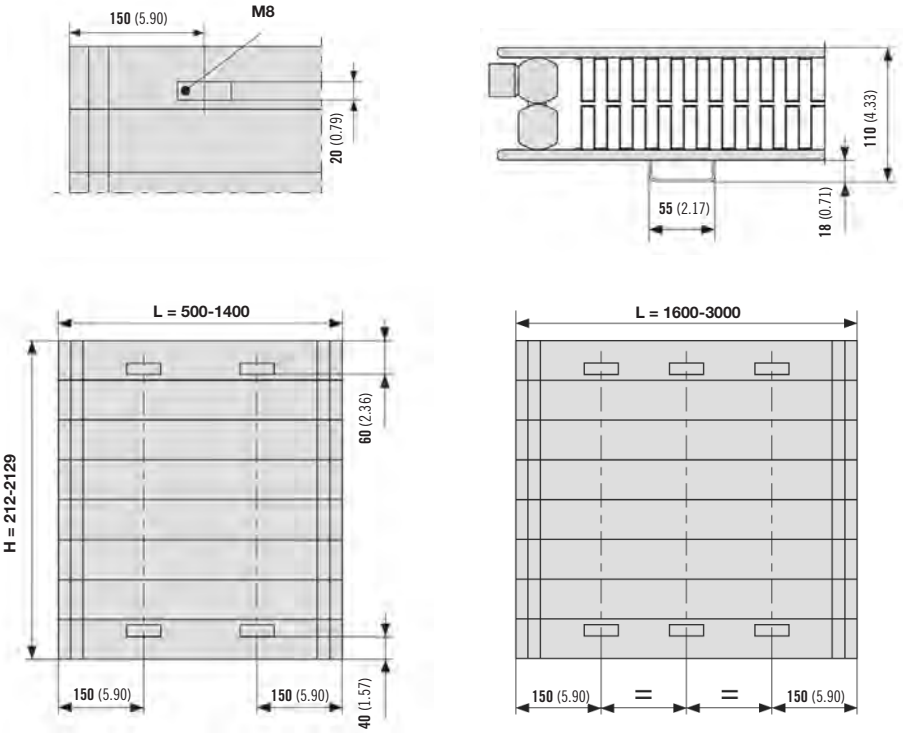

Concord Lo-Line fixing positions

All dimensions in mm. Inches in brackets.

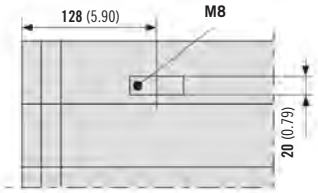

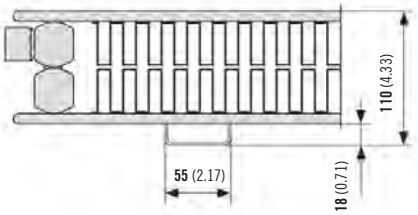

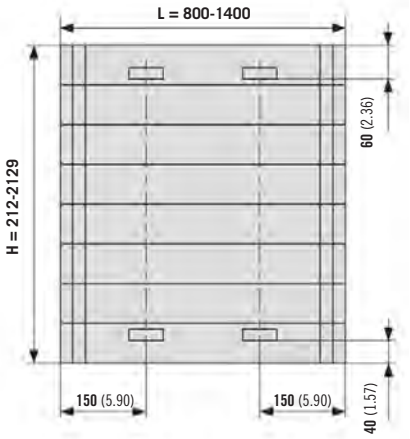

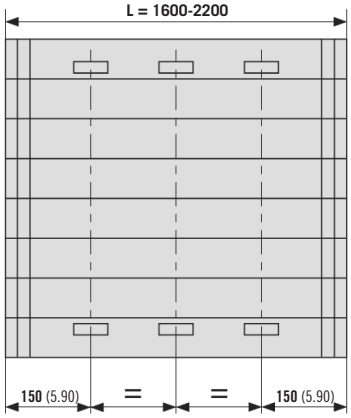

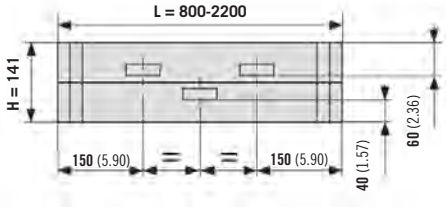

*Welded-on foot supports recommended

Concord Lo-Line 144mm has unique brackets.

Concord Vertical fixing positions

All dimensions in mm. Inches in brackets.

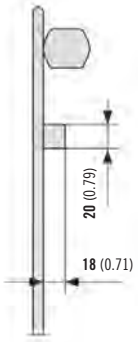

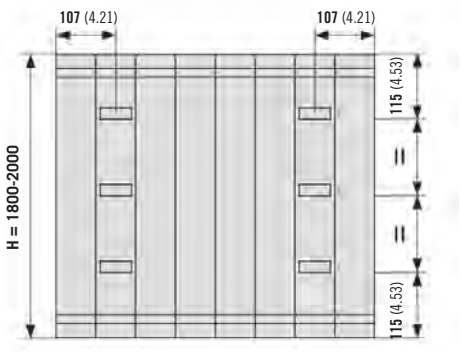

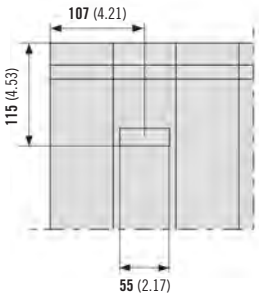

Hardware pack includes air vents, saddle clips & branding clips.

Concord Slimline fixing positions

All dimensions in mm. Inches in brackets.

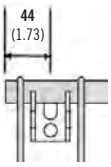

Concord Plane Single, Concord Plane Double, Concord Lo-Line and Concord Vertical wall mounting information

All dimensions in mm. Inches in brackets.

Type	From back of radiator to wall D		From wall to centre of connections D1		From front of radiator to wall D2	
	mm	in	mm	in	mm	in
Plane Single	9	0.35	44	1.73	69	2.72
Plane Double	27	1.06	94	3.70	119	4.69
Vertical	25	0.98	44	1.73	70	2.76

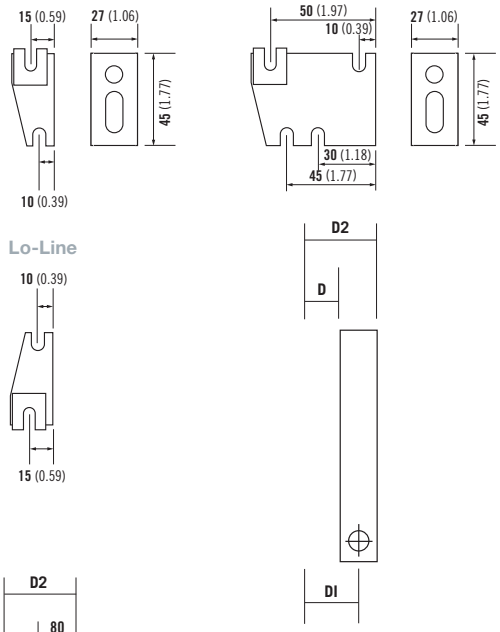

Concord Slimline wall mounting information

All dimensions in mm. Inches in brackets.

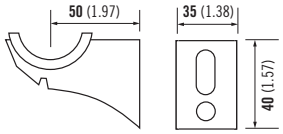

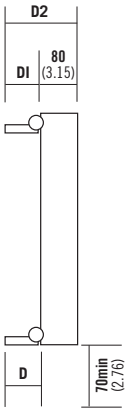

Type	Back face to finished wall D		Connection centres from finished wall D1		Front face from finished wall D2	
	mm	in	mm	in	mm	in
Slimline	35	1.38	50	1.97	130	5.12

Concord piping options

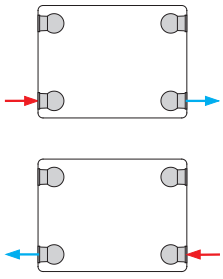

Concord Plane and Lo-Line floor mounting positions

All dimensions in mm. Inches in brackets. Must be specified at time of ordering as they are securely welded during manufacture.

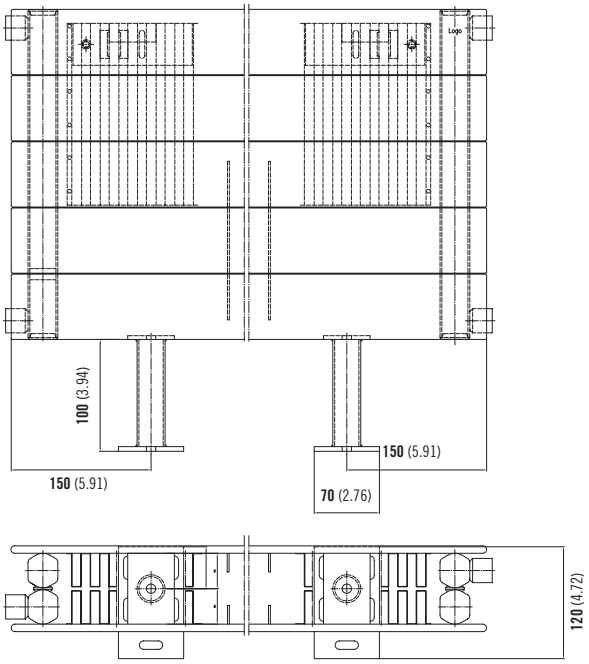

Floor mounting brackets illustration.

This is a made to order product and once ordered it cannot be cancelled.

Stelrad Classic Column Range Horizontal

50 Δt (75/65/20°C)

Height	Length mm	Elements	Columns	UIN	Heat output Watts	Btu/hr
300	444	9	3	163000	288	983
	628	13	3	163001	416	1419
	858	18	3	163002	576	1965
	1042	22	3	163003	704	2402
	1272	27	3	163004	864	2948
	1456	31	3	163005	992	3385
	1870	40	3	163006	1280	4367
	444	9	4	163007	377	1286
	628	13	4	163008	545	1860
	858	18	4	163009	754	2573
	1042	22	4	163010	922	3146
	1272	27	4	163011	1131	3861
500	628	13	2	163012	499	1703
	858	18	2	163013	691	2358
	1042	22	2	163014	845	2883
	1272	27	2	163015	1037	3538
	444	9	3	163016	464	1585
	628	13	3	163017	671	2289
	858	18	3	163018	929	3170
	1042	22	3	163019	1135	3873
	1272	27	3	163020	1393	4755
	1456	31	3	163021	1600	5459
	1870	40	3	163022	2064	7044
	444	9	4	163023	608	2074
	628	13	4	163024	879	2999
	858	18	4	163025	1217	4152
	1042	22	4	163026	1487	5074
	1272	27	4	163027	1825	6227
600	628	13	2	163028	589	2010
	858	18	2	163029	815	2781
	1042	22	2	163030	997	3402
	1272	27	2	163031	1223	4173
	444	9	3	163032	548	1870
	628	13	3	163033	792	2702
	858	18	3	163034	1096	3740
	1042	22	3	163035	1340	4572
	1272	27	3	163036	1644	5612
	1456	31	3	163037	1888	6442
	1870	40	3	163038	2436	8312
	444	9	4	163039	718	2450
	628	13	4	163040	1037	3538
	858	18	4	163041	1436	4900
	1042	22	4	163042	1756	5991
	1272	27	4	163043	2155	7353
750	858	18	3	163044	1337	4562
	1042	22	3	163045	1635	5579
	1272	27	3	163046	2006	6844
	1456	31	3	163047	2303	7861
	1870	40	3	163048	2972	10140
	444	9	4	163049	877	2992
	628	13	4	163050	1266	4320
	858	18	4	163051	1753	5981
	1042	22	4	163052	2143	7312
	1272	27	4	163053	2630	8974

Δt50 is the UK's industry standard for heating outputs, which has an operating temperature of 75/65/20°C if you have a low temperature heat source you may wish to consider Δt40 or Δt30 output (see your installer or system designer).

Stelrad Classic Column Range Horizontal

Height	Length mm	Elements	Columns	40 Δt (65/55/20°C) Heat output UIN	Watts	Btu/hr	30 Δt (55/45/20°C) Heat output UIN	Watts	Btu/hr
300	444	9	3	163000	215	735	163000	148	506
	628	13	3	163001	311	1062	163001	214	731
	858	18	3	163002	431	1470	163002	297	1012
	1042	22	3	163003	527	1797	163003	363	1237
	1272	27	3	163004	646	2205	163004	445	1518
	1456	31	3	163005	742	2532	163005	511	1743
	1870	40	3	163006	957	3267	163006	659	2249
	444	9	4	163007	282	962	163007	194	662
	628	13	4	163008	408	1391	163008	281	958
	858	18	4	163009	564	1924	163009	388	1325
	1042	22	4	163010	690	2353	163010	475	1620
	1272	27	4	163011	846	2887	163011	582	1987
500	628	13	2	163012	373	1274	163012	257	877
	858	18	2	163013	517	1764	163013	356	1214
	1042	22	2	163014	632	2157	163014	435	1485
	1272	27	2	163015	776	2647	163015	534	1822
	444	9	3	163016	347	1184	163016	239	815
	628	13	3	163017	502	1713	163017	346	1179
	858	18	3	163018	695	2371	163018	478	1632
	1042	22	3	163019	849	2897	163019	585	1994
	1272	27	3	163020	1042	3555	163020	717	2448
	1456	31	3	163021	1197	4083	163021	824	2811
	1870	40	3	163022	1544	5268	163022	1063	3627
	444	9	4	163023	455	1552	163023	313	1068
	628	13	4	163024	657	2243	163024	453	1545
	858	18	4	163025	910	3106	163025	627	2138
	1042	22	4	163026	1112	3795	163026	766	2613
	1272	27	4	163027	1365	4658	163027	940	3207
600	628	13	2	163028	441	1503	163028	303	1035
	858	18	2	163029	610	2080	163029	420	1432
	1042	22	2	163030	746	2545	163030	513	1752
	1272	27	2	163031	915	3121	163031	630	2149
	444	9	3	163032	410	1399	163032	282	963
	628	13	3	163033	592	2021	163033	408	1392
	858	18	3	163034	820	2797	163034	564	1926
	1042	22	3	163035	1002	3420	163035	690	2355
	1272	27	3	163036	1230	4196	163036	847	2889
	1456	31	3	163037	1412	4819	163037	972	3318
	1870	40	3	163038	1822	6217	163038	1255	4280
	444	9	4	163039	537	1832	163039	370	1262
	628	13	4	163040	776	2647	163040	534	1822
	858	18	4	163041	1074	3665	163041	740	2523
	1042	22	4	163042	1313	4482	163042	904	3086
	1272	27	4	163043	1612	5500	163043	1110	3787
750	858	18	3	163044	1000	3412	163044	689	2349
	1042	22	3	163045	1223	4173	163045	842	2873
	1272	27	3	163046	1500	5120	163046	1033	3525
	1456	31	3	163047	1723	5878	163047	1186	4047
	1870	40	3	163048	2223	7585	163048	1531	5222
	444	9	4	163049	656	2238	163049	452	1541
	628	13	4	163050	947	3231	163050	652	2225
	858	18	4	163051	1311	4474	163051	903	3080
	1042	22	4	163052	1603	5469	163052	1104	3766
	1272	27	4	163053	1967	6712	163053	1354	4621

Stelrad Classic Column Range Vertical

50 Δt (75/65/20°C)

Height	Length mm	Elements	Columns	Heat output UIN	Watts	Btu/hr
1800	352	7	2	163054	868	2962
	444	9	2	163055	1116	3808
2000	352	7	2	163056	966	3296
	444	9	2	163057	1242	4238
2500	352	7	2	163058	1197	4084
	444	9	2	163059	1539	5251

Δt50 is the UK's industry standard for heating outputs, which has an operating temperature of 75/65/20°C if you have a low temperature heat source you may wish to consider Δt40 or Δt30 output (see your installer or system designer).

40 Δt (65/55/20°C) 30 Δt (55/45/20°C)

Height	Length mm	Elements	Columns	Heat output UIN	Watts	Btu/hr	Heat output UIN	Watts	Btu/hr
1800	352	7	2	163054	649	2215		447	1525
	444	9	2	163055	835	2848		575	1961
2000	352	7	2	163056	723	2465		497	1697
	444	9	2	163057	929	3170		640	2182
2500	352	7	2	163058	895	3055		616	2103
	444	9	2	163059	1151	3928		793	2704

EN 442 Certification Data - CETIAT tested in accordance with BS EN 442

Type	2 Columns					3 Columns				4 Columns			
Height	500	600	1800	2000	2500	300	500	600	750	300	500	600	750
W/m at 75/65/20	835	985	2696	3000	3717	696	1122	1324	1615	911	1469	1734	2117
n-coefficients	1.25	1.25	1.31	1.31	1.3	1.25	1.25	1.26	1.26	1.25	1.26	1.27	1.27
Heated Surface Area (m²/m)	1.52	1.96	6.09	6.74	8.48	1.52	2.39	3.04	3.7	1.96	3.26	4.13	5
Weight (kg/m)	17.39	21.74	58.7	65.22	80.43	15.22	26.09	30.43	36.96	21.74	36.96	43.48	54.35
Water Contents (l/m)	10.87	13.04	32.61	36.96	44.72	13.04	17.39	19.57	23.91	15.22	21.74	26.09	30.43
Wall to tap centre (mm)	54 / 59	54 / 59	54 / 59	54 / 59	54 / 59	73 / 78	73 / 78	73 / 78	73 / 78	91 / 96	91 / 96	91 / 96	91 / 96

Classic Column typical valve installation

All dimensions in mm. Inches in brackets.

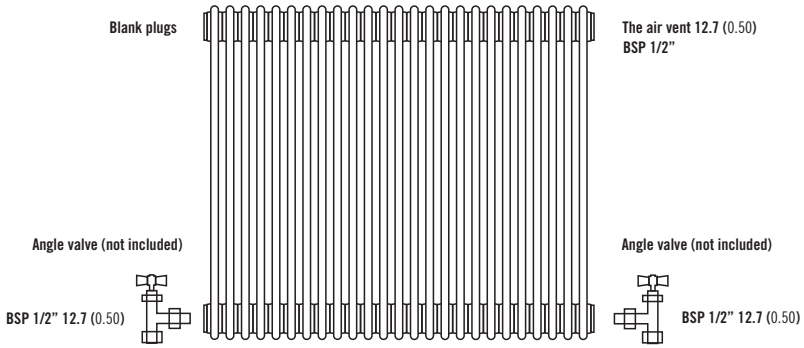

Note: Factory fitted bushes are welded in place and not removable.
If installing TBOE (Top Bottom Opposite End) please note that the radiator MUST be inverted.

Classic Column typical bracket installation

All dimensions in mm.

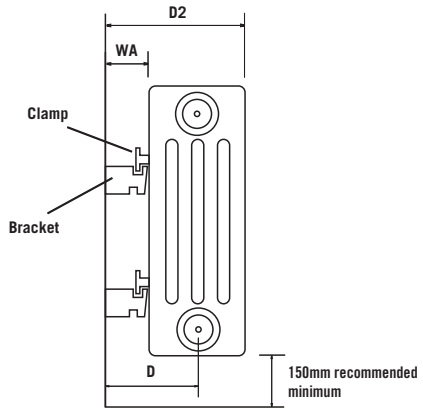

Measurements using 10mm CVD Brackets Slot
Add 5mm if using 15mm Slot

	WA	D	D2
2 Col	23	54	85
3 Col	23	73	123
4 Col	23	91	159

Brackets and Clamps Required

	No of Sections
4	0 - 23
6	24 - 41

Classic Column optional floor mounting brackets

All dimensions in mm. Inches in brackets.

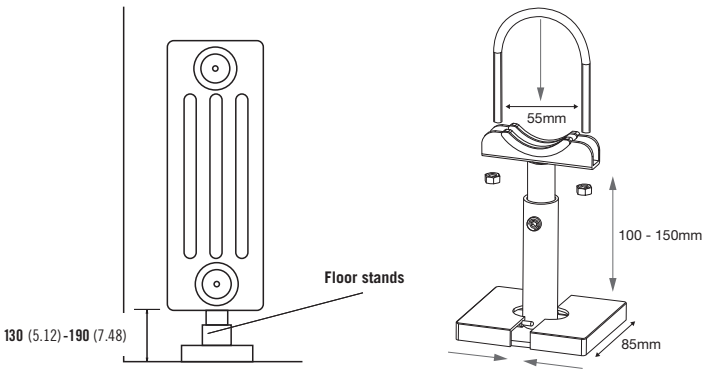

Pressure drops

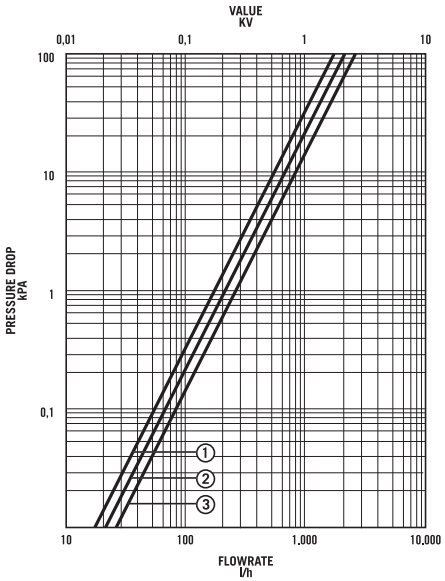

1 2 Column (P1), 11 (K1)
2 3 Column (P+), 22 (K2)
3 4 Column (K3)

Stelrad Swing

50Δt (75/65/20°C) P+ K2

Height	Emitter length mm	Casing length mm	UIN	Heat output Watts	Heat output Btu/hr	Casing length mm	UIN	Heat output Watts	Heat output Btu/hr
1820	400	504	38418210	1224	4176	527	38418220	1476	5036
	500	604	38518210	1530	5220	627	38518220	1845	6295
	600	704	38618210	1836	6264	727	38618220	2214	7554
2020	400	504	38420210	1308	4463	527	38420220	1584	5405
	500	604	38520210	1635	5579	627	38520220	1980	6756
	600	704	38620210	1962	6694	727	38620220	2376	8107

Δt50 is the UK's industry standard for heating outputs, which has an operating temperature of 75/65/20°C if you have a low temperature heat source you may wish to consider Δt40 or Δt30 output (see your installer or system designer).

40Δt (65/55/20°C) P+ K2

Height	Emitter length mm	Casing length mm	UIN	Heat output Watts	Heat output Btu/hr	Casing length mm	UIN	Heat output Watts	Heat output Btu/hr
1820	400	504	38418210	863	2943	527	38418220	1040	3549
	500	604	38518210	1078	3679	627	38518220	1300	4437
	600	704	38618210	1294	4415	727	38618220	1560	5324
2020	400	504	38420210	922	3146	527	38420220	1116	3809
	500	604	38520210	1152	3932	627	38520220	1396	4762
	600	704	38620210	1383	4718	727	38620220	1675	5714

30Δt (55/45/20°C) P+ K2

Height	Emitter length mm	Casing length mm	UIN	Heat output Watts	Heat output Btu/hr	Casing length mm	UIN	Heat output Watts	Heat output Btu/hr
1820	400	504	38418210	630	2151	527	38418220	760	2594
	500	604	38518210	788	2688	627	38518220	950	3242
	600	704	38618210	945	3226	727	38618220	1140	3890
2020	400	504	38420210	674	2298	527	38420220	816	2784
	500	604	38520210	842	2873	627	38520220	1020	3479
	600	704	38620210	1010	3447	727	38620220	1224	4175

EN 442 Certification Data - CETIAT tested in accordance with BS EN 442

Type	P+		K2	
Height	1820	2020	1820	2020
W/m at 75/65/20	3060	3270	3690	3960
n-coefficients	1.30	1.30	1.33	1.33
Heated Surface Area (m²/m)	13.58	16.20	29.90	37.74
Weight (kg/m)	96.00	106.20	105.30	116.40
Water Contents (l/m)	15.90	17.70	15.90	17.70
Wall to tap centre (mm)	65	65	77	77

Stelrad Swing mounting brackets

Height		H2		H3		H4	
mm	in	mm	in	mm	in	mm	in
1800	70.87	70	2.75	830	43.89	1590	63.58
2000	78.74	70	2.75	930	47.83	1790	71.46

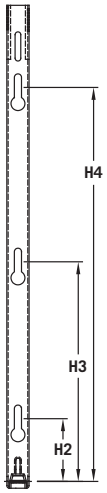

Stelrad Swing wall mounting information

All dimensions in mm. Inches in brackets.

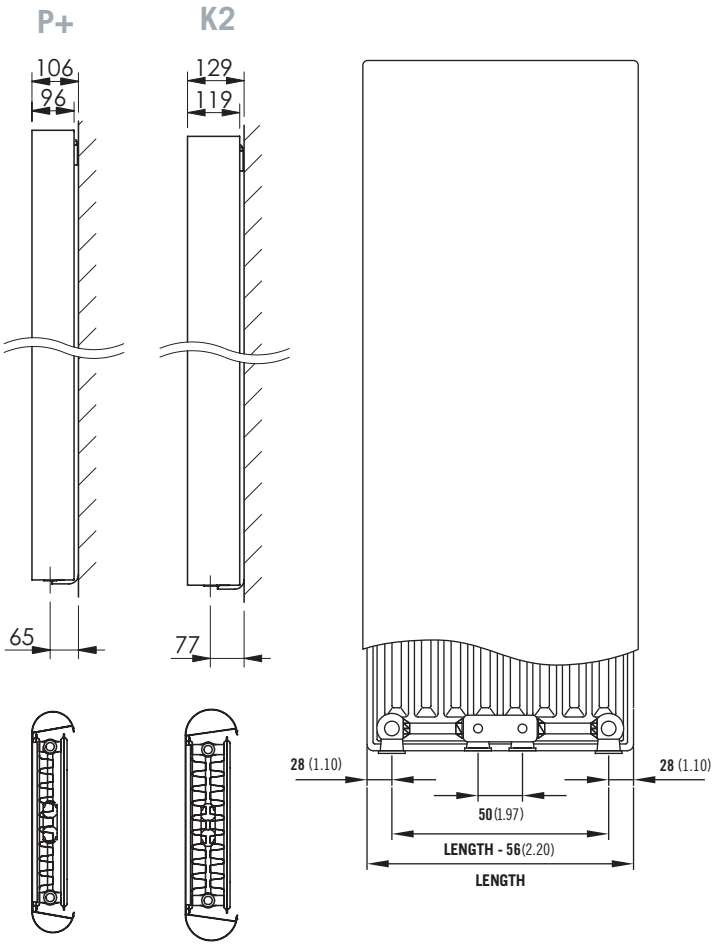

Comes complete with Stelrad's class leading safety bracket.

Swing piping options

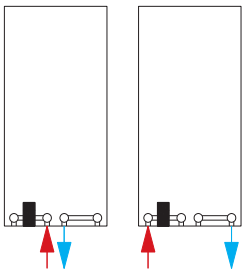

Display:
Front
of radiator

Tapping Centres

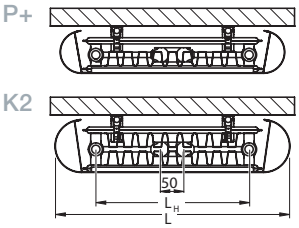

L - P+ mm	L - K2 mm	LH mm
504	527	344
604	627	444
704	727	544

Stelrad Caliente Vertical

50 Δt (75/65/20°C)

Height	Length mm	Elements	Single Tube UIN	Single Tube Heat output Watts	Single Tube Heat output Btu/hr	Double Tube UIN	Double Tube Heat output Watts	Double Tube Heat output Btu/hr
1200	330	10	401211330	485	1655	-	-	-
	495	15	401211495	727	2481	-	-	-
1800	330	10	401811330	702	2395	-	-	-
	429	13	401811429	912	3112	-	-	-
	495	15	-	-	-	401822495	1590	5425
	528	16	401811528	1123	3832	-	-	-
	660	20	401811660	1404	4790	401822660	2120	7233
	726	22	401811726	1544	5268	-	-	-

Δt50 is the UK's industry standard for heating outputs, which has an operating temperature of 75/65/20°C if you have a low temperature heat source you may wish to consider Δt40 or Δt30 output (see your installer or system designer).

40 Δt (65/55/20°C)

30 Δt (55/45/20°C)

Height	Length mm	Elements	40 Δt Single Tube UIN	40 Δt Single Tube Heat output Watts	40 Δt Single Tube Heat output Btu/hr	40 Δt Double Tube UIN	40 Δt Double Tube Heat output Watts	40 Δt Double Tube Heat output Btu/hr	30 Δt Single Tube UIN	30 Δt Single Tube Heat output Watts	30 Δt Single Tube Heat output Btu/hr	30 Δt Double Tube UIN	30 Δt Double Tube Heat output Watts	30 Δt Double Tube Heat output Btu/hr
1200	330	10	401211330	281	1238	-	-	-	401211330	250	852	-	-	-
	495	15	401211495	421	1855	-	-	-	401211495	374	1277	-	-	-
1800	330	10	401811330	406	1792	-	-	-	401811330	362	1234	-	-	-
	429	13	401811429	528	2328	-	-	-	401811429	470	1603	-	-	-
	495	15	-	-	-	401822495	920	4058	-	-	-	401822495	819	2794
	528	16	401811528	650	2866	-	-	-	401811528	578	1973	-	-	-
	660	20	401811660	812	3583	401822660	1226	5411	401811660	723	2467	401822660	1092	3725
	726	22	401811726	893	3941	-	-	-	401811726	795	2713	-	-	-

EN 442 Certification Data - CETIAT tested in accordance with BS EN 442

Type	Single		Double
Height	1200	1800	1800
W/m at 75/65/20	1470	2126	3212
n-coefficients	1.27	1.28	10.28
Heated surface area (m2/m)	2.28	3.43	6.85
Weight (kg/m)	23.33	33.64	64.85
Water contents (l/m)	10.61	15.15	28.18
Tapping Centres from wall	38	38	70

Stelrad Caliente Horizontal

50 Δt (75/65/20°C)

Height	Length mm	Elements	Single Tube UIN	Single Tube Heat output Watts	Single Tube Heat output Btu/hr	Double Tube UIN	Double Tube Heat output Watts	Double Tube Heat output Btu/hr
594	800	18	405911800	626	2136	405922800	969	3306
	1000	18	405911100	782	2668	405922100	1211	4132
	1200	18	405911120	938	3200	-	-	-
	1400	18	405911140	1095	3736	-	-	-

Δt50 is the UK's industry standard for heating outputs, which has an operating temperature of 75/65/20°C if you have a low temperature heat source you may wish to consider Δt40 or Δt30 output (see your installer or system designer).

40 Δt (65/55/20°C)

30 Δt (55/45/20°C)

Height	Length mm	Elements	40 Δt Single Tube UIN	40 Δt Single Tube Heat output Watts	40 Δt Single Tube Heat output Btu/hr	40 Δt Double Tube UIN	40 Δt Double Tube Heat output Watts	40 Δt Double Tube Heat output Btu/hr	30 Δt Single Tube UIN	30 Δt Single Tube Heat output Watts	30 Δt Single Tube Heat output Btu/hr	30 Δt Double Tube UIN	30 Δt Double Tube Heat output Watts	30 Δt Double Tube Heat output Btu/hr
594	800	18	405911800	468	1598	405922800	724	2473	405911800	322	1100	405922800	499	1703
	1000	18	405911100	584	1996	405922100	905	3091	405911100	403	1374	405922100	624	2128
	1200	18	405911120	701	2394	-	-	-	405911120	483	1648	-	-	-
	1400	18	405911140	819	2795	-	-	-	405911140	564	1924	-	-	-

EN 442 Certification Data - CETIAT tested in accordance with BS EN 442

Type	Single	Double
Height	594	594
W/m at 75/65/20	782	1210
n-coefficients	1.25	1.26
Heated surface area (m2/m)	1.13	2.26
Weight (kg/m)	12.2	22.6
Water contents (l/m)	5.49	12.47
Tapping Centres from wall	38	70

Caliente wall mounting information

All dimensions in mm. Inches in brackets.

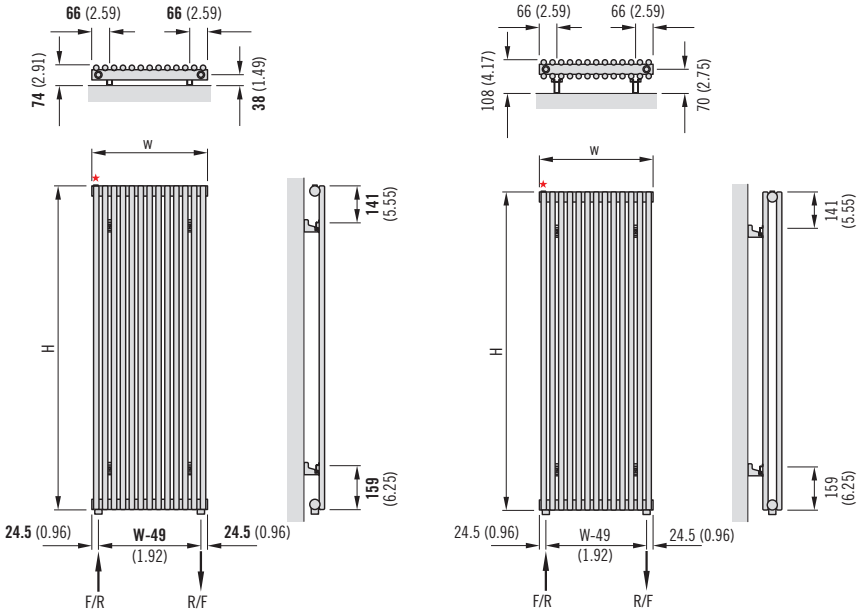

Product Specification

Tube diameter = Ø20mm and Ø38mm
Steel thickness = 1.25mm for Ø20 ; 1.4mm for Ø38
Working pressure = 4 bar
Operating temp = 110° max

★ Air vents

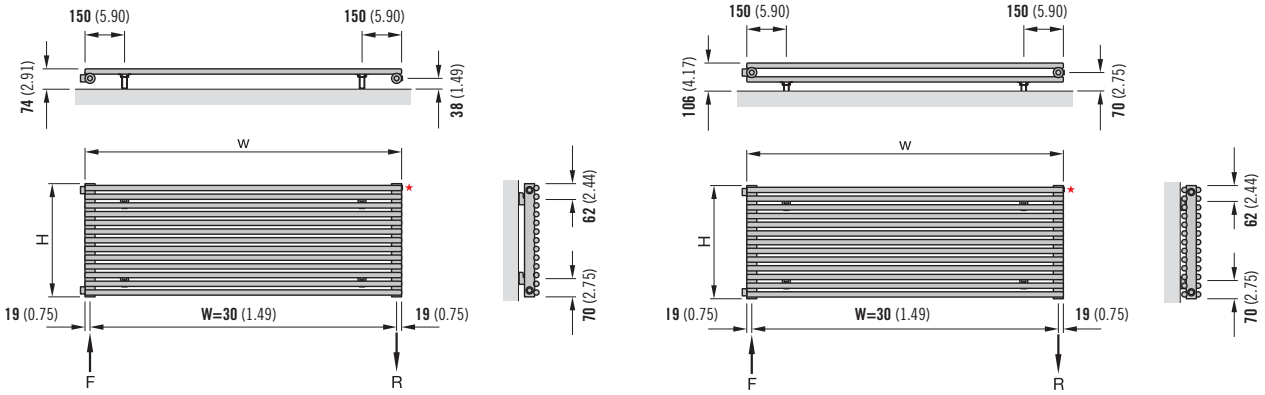

STELRAD'S ADVANCED HEATLOSS CALCULATOR

The Stelrad STARS Heatloss Calculator contains an inbuilt U value calculator.

Save time and effort by using the Stelrad STARS program - the perfect solution for accurate sizing and design flexibility.

Visit www.starsapp.co.uk

Stelrad Excel

50 Δt (75/65/20°C) Floor Mounted Wall Mounted

Height	Length mm	Max Projection mm	UIN	Heat output Watts	Heat output Btu/hr	Max Projection mm	UIN	Heat output Watts	Heat output Btu/hr
1800	380	60	147145	727	2481	60	147040	727	2481
	500	60	147180	957	3266	60	147075	957	3266
2000	-	-	-	-	-	-	-	-	-
	500	60	147215	1048	3577	60	147110	1048	3577

Δt50 is the UK's industry standard for heating outputs, which has an operating temperature of 75/65/20°C if you have a low temperature heat source you may wish to consider Δt40 or Δt30 output (see your installer or system designer).

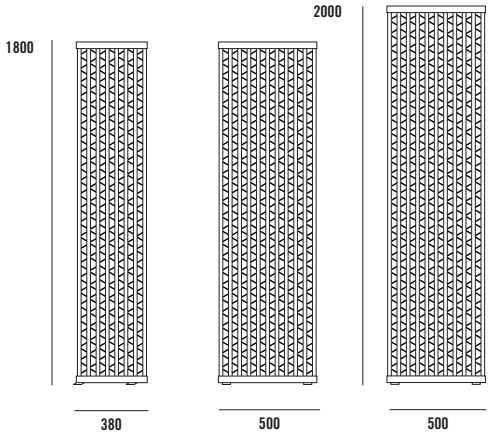

Brackets positions

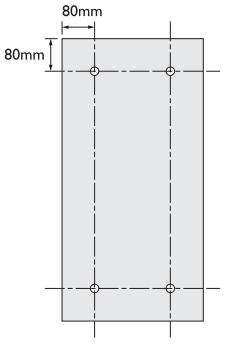

Stelrad Arc & Wave

50 Δt (75/65/20°C) Arc

Height	Length mm	Max Projection mm	UIN	Heat output Watts	Heat output Btu/hr
1800	380	200	147037	882	3010
	440	200	147038	1021	3484
	620	200	147039	1438	4908

50 Δt (75/65/20°C) Wave

Height	Length mm	Max Projection mm	UIN	Heat output Watts	Heat output Btu/hr
1800	380	200	147034	882	3010
	440	200	147035	1021	3484
	620	200	147036	1438	4908

Δt50 is the UK's industry standard for heating outputs, which has an operating temperature of 75/65/20°C if you have a low temperature heat source you may wish to consider Δt40 or Δt30 output (see your installer or system designer).

Arc

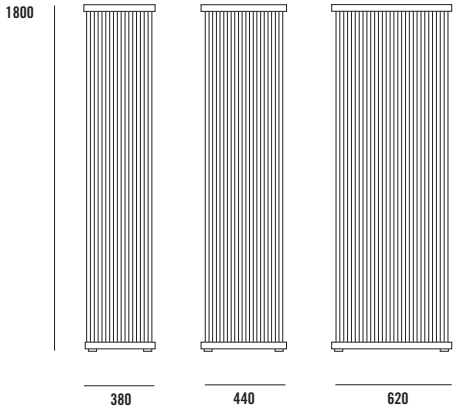

Wave

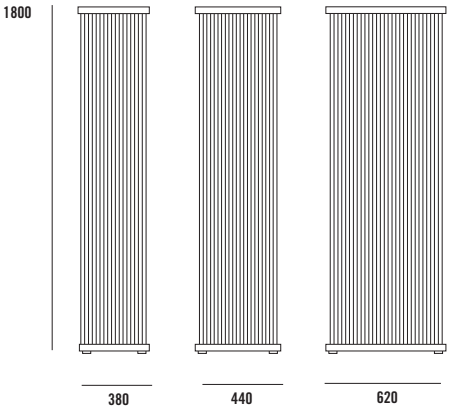

Brackets positions
for both Arc and Wave

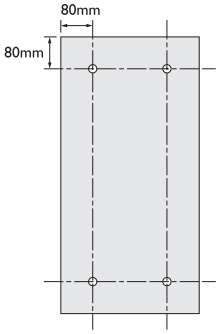

Stelrad Vistaline

50 Δt (75/65/20°C)

2 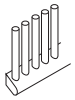

3

Height	Length mm	Max Projection mm	Heat output UIN	Watts	Btu/hr	Max Projection mm	Heat output UIN	Watts	Btu/hr
1800	320	60	147250	742	2532	66	147460	818	2792
	440	60	147285	1021	3484	66	147495	1130	3856
	620	60	147320	1438	4908	66	147530	1597	5450
2000	500	60	147355	1275	4351	66	147565	1415	4829
	620	60	147390	1580	5392	66	147600	1758	6000
	740	60	147425	1886	6437	66	-	-	-

Δt50 is the UK's industry standard for heating outputs, which has an operating temperature of 75/65/20°C if you have a low temperature heat source you may wish to consider Δt40 or Δt30 output (see your installer or system designer).

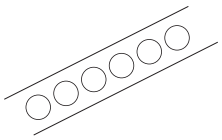

Vistaline 2
Single row

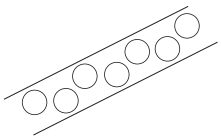

Vistaline 3
Double offset row

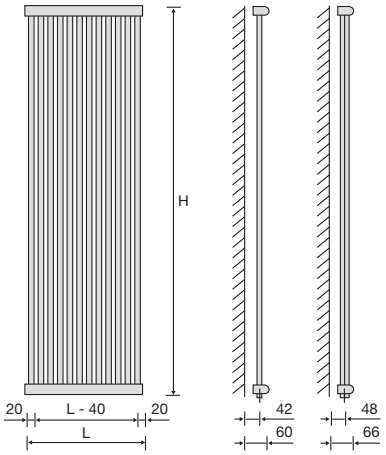

Brackets positions

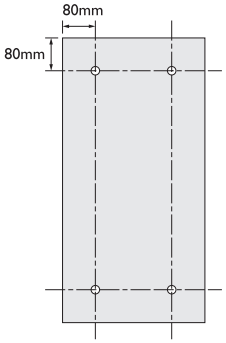

Tapping centre for the Vistaline

L - 40mm
Perpendicular
to the manifold

H - 22mm (± 2mm)
In line with the manifold
*Coupling protudes
10mm

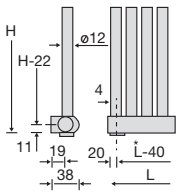

Standard fitting
EG ø ½"

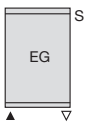

Stelrad Ellipse

50 Δt (75/65/20°C)

EH 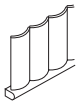

EOH 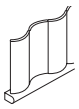

Height	Length mm	Max Projection mm	UIN	Heat output Watts	Heat output Btu/hr	Max Projection mm	UIN	Heat output Watts	Heat output Btu/hr
1800	459	65	147635	858	2928	65	147810	858	2928
	689	65	147670	1287	4392	65	147845	1287	4392
2000	459	65	147705	954	3256	65	147880	954	3256
	689	65	147740	1431	4884	65	147915	1431	4884
	765	65	147775	1590	5426	65	147950	1590	5426

Δt50 is the UK's industry standard for heating outputs, which has an operating temperature of 75/65/20°C if you have a low temperature heat source you may wish to consider Δt40 or Δt30 output (see your installer or system designer).

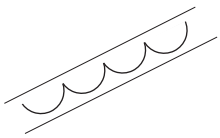

Ellipse EH
Inward

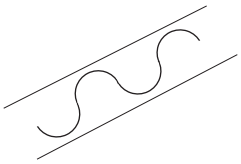

Ellipse EOH
Alternate

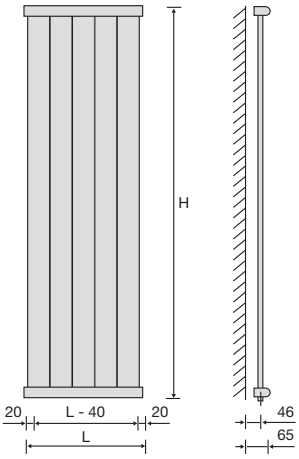

Brackets positions

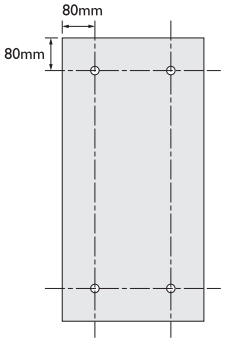

Tapping centres EH model

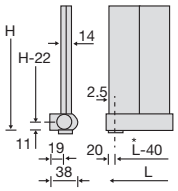

L - 40mm
Perpendicular
to the manifold

H - 22mm (± 2mm)
In line with the manifold
*Coupling protrudes
10mm

Standard fitting
EG ø ½"

Stelrad Optia

50 Δt (75/65/20°C)

Height	Length mm	Max Projection mm	UIN	Heat output Watts	Heat output Btu/hr
1800	160	202	147985	742	2532
	200	242	147986	928	3167
	240	282	147987	1114	3802

Δt50 is the UK's industry standard for heating outputs, which has an operating temperature of 75/65/20°C if you have a low temperature heat source you may wish to consider Δt40 or Δt30 output (see your installer or system designer).

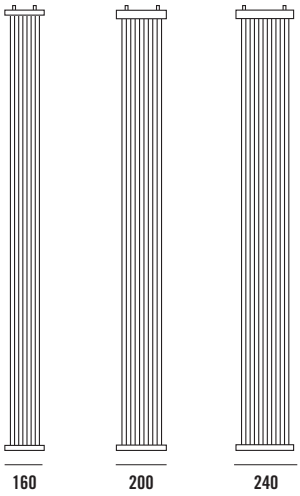

Side view

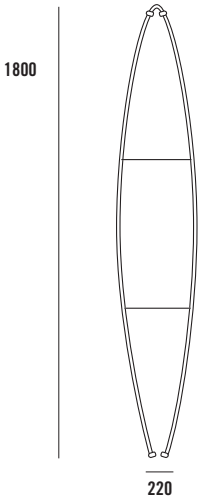

Front view

Brackets assembly

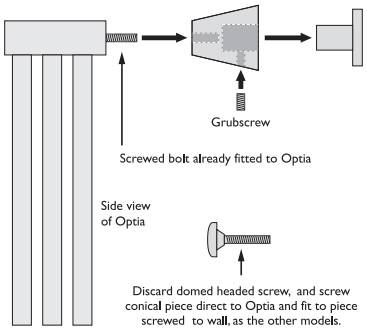

Brackets positions

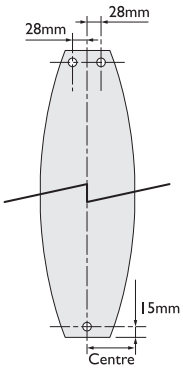

Energy Saving

Improves energy efficiency and comfort whilst reducing bills.

A radiator that produces more comfort at less cost

The power we use in buildings accounts for 40% of global consumption. And that has a massive impact on the environment. But with smarter energy management, our buildings can emit up to 60% less CO^2. That's something the European Union are moving towards, by making energy consumption standards stricter.

At Stelrad, we believe the heating industry has a major role to play, by developing systems that work so efficiently that they produce more heat at lower temperatures.

That's why we've developed Stelrad Radical, the energy saving radiator. It produces more radiant heat than traditional radiators - saving energy while raising comfort levels. At less cost to the user, and to the environment. That's a Radical step forward.

A radiator that reduces energy bills by up to 10.5%

Your choice of radiator determines how comfortable the heating in your home feels. And how much that comfort costs. You know how a draught free room at 20°C can still feel uncomfortable?

The energy saving radiant heat of the Stelrad Radical will soon fix that. And with the outstanding energy efficiency delivered by its preset valve, it reduces your bills by up to 10.5%, too.

- Thanks to the controlled flow of our unique direct intake technology, the water in the front panel reaches a temperature up to 50% higher than in a traditional radiator
- The Stelrad Radical energy saving radiator reaches its maximum temperature 23% faster than a traditional radiator
- It reaches its optimum performance level while a traditional heater is still heating up
- After only 2 minutes it offers up to 50% more radiant heat
- With higher radiant heat, the feeling of 20°C can be achieved at a lower temperature setting

The Stelrad Radical energy saving radiator's unique and innovative technology raises comfort levels. And by working more efficiently, it reduces energy bills - with a saving of up to 10.5%.

Raising comfort levels with more radiant heat

Domestic heating is usually based on convection and radiation. With convection heating, hot air rises from the heating elements, cools down, descends via the wall and is heated again. With radiant heating, infrared radiation is sent directly around the room regardless of airflows like wind or draughts.

Radiant heat heats up the room, furniture and people, and is reflected back to create a more comfortable feeling similar to the rays of the sun. And standing in the sun always feels much warmer, even if the surrounding temperature is no higher than in the shadow - because it is radiant heat.

A radiator that delivers more heat, more efficiently.

GreenbuildAWARDS Winner 2013

HEVNEWS AWARDS 2013 WINNER DOMESTIC PRODUCT OF THE YEAR AWARD

10 TEN YEAR WARRANTY ON EMITTER

EN EURONORM 442

CE

For further information and advice call 0844 543 6200

- In a traditional radiator the heat generated consists, on average, of 80% convection heat and 20% radiant heat - limiting the feeling of warmth
- The Stelrad Radical energy saving radiator increases radiant heat by up to 50%

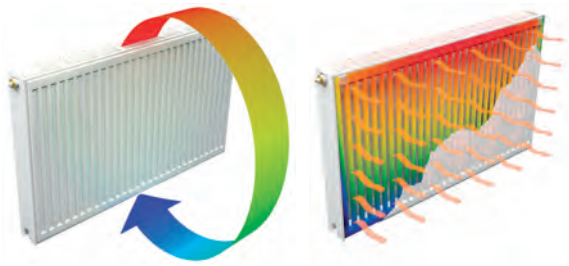

So the comfortable feeling of a room at 20ºC is achieved at a setting of 1 degree less (or even lower).

Up to 50% more radiant heat means more comfort - at a lower cost

These thermal images demonstrate the improved radiant heat of the Stelrad Radical radiator.

The measurements show that the Stelrad Radical energy saving radiator offers 1.5 times more radiant capacity at 50% of the nominal flow (which offers 90% of the nominal heat output) compared to a traditional radiator.

So depending on the radiator size and type it is compared to, the Stelrad Radical energy saving radiator offers up to 50% more radiant heat.

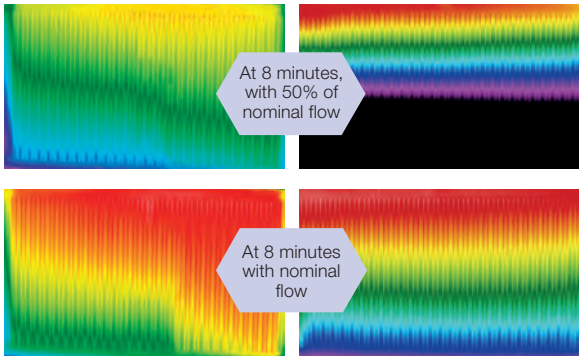

Test conditions: radiator K2, height 600mm, length 1000mm, temperatures 70/55/20°C.

Supported by a RIBA & CIBSE CPD programme

CPD

Stelrad are certified as a member of the RIBA and CIBSE CPD Providers Network. This means we can provide RIBA and CIBSE approved CPD material to architects and other specifiers. An hour-long programme delivered by a member of the Stelrad team delivers information on every aspect of the Stelrad Radical energy saving radiator and its application.

Energy savings tested, assessed and declared by KIWA

KIWA is a highly respected Pan European institute providing internationally recognized declaration services for systems and products. As an independent expert KIWA also carries out specialist testing, and the KIWA Gas Technology division has rigorously trialled the Stelrad Radical radiator to assess and declared its energy saving performance.

Compatibility

The Stelrad Radical radiator is compatible with the following:

- Gas boilers
- Electric boilers
- Solar PV
- Ground source heat pumps (GSHP)
- Air source heat pumps (ASHP)
- Biomass installations

A radiator that heats the room, not the wall

Traditional radiators are as warm at the back as they are at the front. So valuable energy is wasted, as the heat goes into and through the wall.

The unique and innovative technology of the Stelrad Radical radiator changes all that. The flow connection to the front panel and the return connection into the back ensures that you feel warmer, faster.

And thanks to the higher radiation from the front panel, the back panel is much cooler than with other radiators. So up to 9% less radiant heat is lost through the back of the radiator.

That's not just good for comfort levels. It also means the heating system is more efficient, which reduces bills - and CO^2 emissions.

Less heat lost into the wall

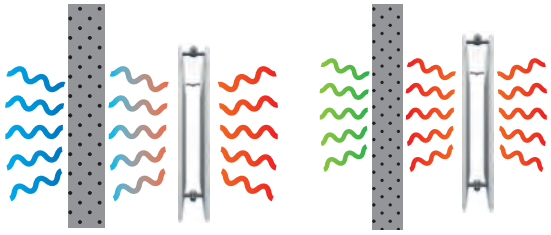

Radical radiator Standard radiator

Fully compatible with renewable energy resources

The Stelrad Radical energy saving radiator is perfectly suited for both solo and multiple heating installations. It can be connected to a modulating gas or fuel burner and is compatible with all kinds of low temperature systems, such as heat pumps, solar cells and biomass installations.

Faster heating means less CO^2 - and lower energy bills

Higher radiant heat levels and front panel temperatures combine with other benefits to reduce bills and CO^2 emissions.

Heating up fully in less time

Thanks to its unique flow pattern, heat up times are dramatically shorter for the Stelrad Radical compared to a traditional radiator.

1. Directed flow

Hot water is directed into and around the front panel. In a traditional radiator the water flow divides in parallel to front and back panel.

2. Distribution of hot water

Hot water rises in one water channel and is distributed equally over the front panel. A unique system then directs it to the back panel where it is spread equally over the back panel water channels.

3. Faster heat up

The front panel of the Stelrad Radical radiator reaches a temperature of 62.5°C after 8.5 minutes. At that time, the front panel of a traditional radiator is at 59.3°C. It only reaches its maximum temperature after 11 minutes, by which time the Stelrad Radical has already been operating at maximum for 2.5 minutes.

Fast, convenient and flexible fitting

Angle H Block Straight H Block with couplings

Simple and quick to connect with Hydro Block (H Block)

Simple and quick to connect with Hydro Block (H Block)

With the ¾" male thread, the H Block's central connection means you can connect pipes directly to the Stelrad Radical radiator with additional couplers. This reduces the risk of leaks and improves the installation speed.

The H Block connects the radiator to the flow and return pipe and has a built-in drain off function, valve isolator and a lock shield for ease of installation and servicing.

- Two H Block configurations are available: with straight connections for pipes coming from the floor or angle connections for pipes coming from the wall.
- The H Block pack also includes a choice of coupling pieces to connect the H Block to the pipes - either 10mm or 15mm.

Installers should order a completed unit based on the appropriate H Block variation.

Left or right side valve position

The Stelrad Radical radiator's valve can be mounted on either the left or right side without having to adjust the supply and return pipes. (K2 only).

Preset thermostatic valve

The thermostatic valve regulates the water supply in the radiator. This valve is preset in the factory according to the radiator's size, which guarantees optimum efficiency.

Central connection

The connection coupling of the Stelrad Radical is located in the middle of the radiator. This means that the location of the connection no longer depends on the length of the radiator, so pipes can be laid down early in the project with no need to know the size of the radiator.

Thermostatic head with build-in sensor

Technical data

- Setting range 6°C to 28°C (43°F to 82°F)
- Valve stroke limiter
- Setting numbers 1 to 5
- ❄ Frost protection 6°C (43°F)
- Max. sensor temperature 50°C (122°F)
- Hysteresis 0.3 K
- Water temperature influence 0.7 K
- Differential pressure influence 0.3 K
- Closing time 24 minutes

Thermostatic label

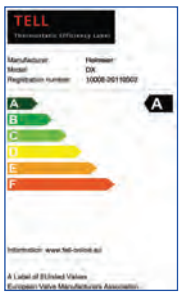

Impacting heating levels - and costs

Example 1 shows the effect of an unbalanced system.

Example 2 shows how more efficient a balanced system is.

Example 1:
An unbalanced system

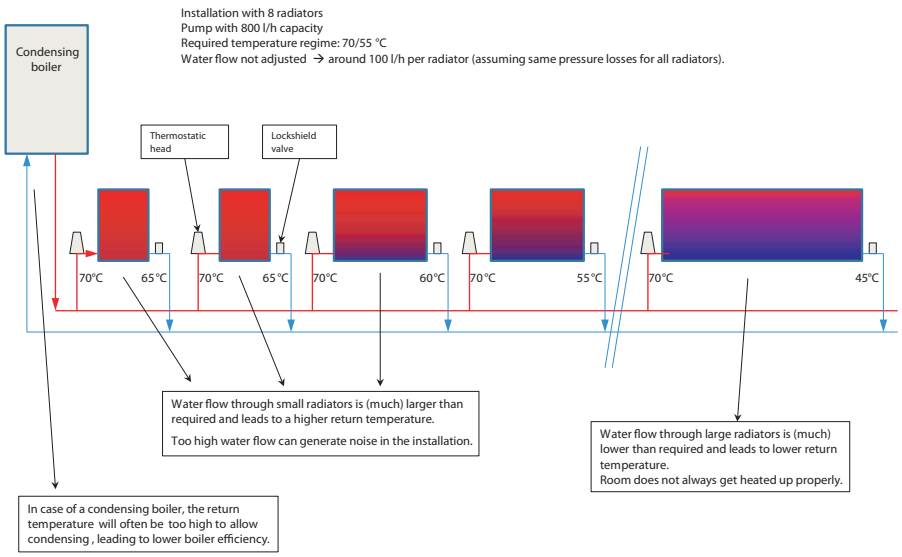

To avoid these problems, it is necessary to balance the heating system by adjusting the water flow rate to each radiator. The right flow rate leads to a correct return temperature out of each radiator and, therefore, the correct heat output for each radiator, as illustrated in example 2.

Example 2:
A balanced system

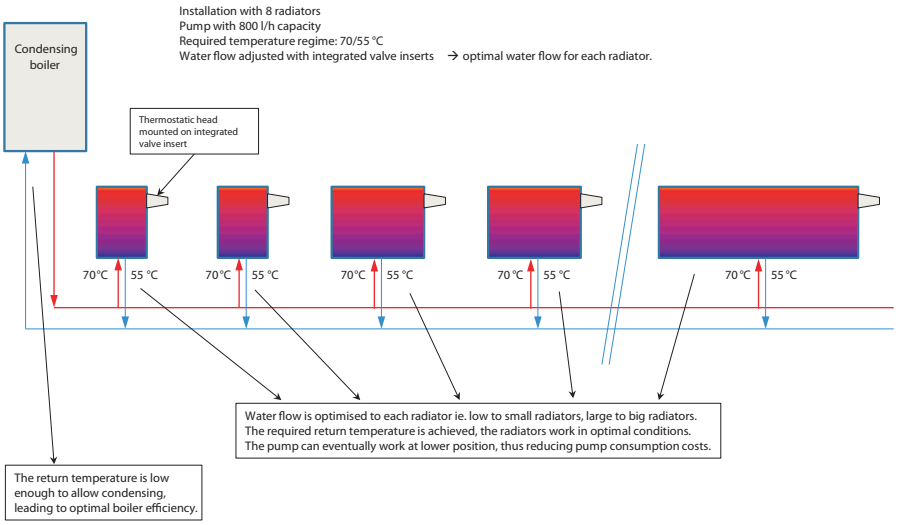

This is why the Stelrad Radical radiator is delivered with a thermostatic valve that is factory-adjusted according to the radiator size. By doing so, Stelrad help reduce energy costs.

Preset valves - environmentally friendly and energy efficient

Every Stelrad Radical radiator is equipped with a preset valve, which enhances the efficiency of the system and reduces energy consumption.

This valve is preset in order to control the water flow, producing maximum efficiency at optimum temperature - and is an essential element in the Stelrad Radical energy saving design.

You can recognise the setting by the coloured valve closure (yellow, white, red, black or blue). The default setting is matched to the heat output of the radiator at system temperatures of both 70/55/20°C and 55/45/20°C.

Height	300		500		600	
Type	K1	K2	K1	K2	K1	K2
400			5.5	5.5	5.5	5.5
500	5.5	5.5	5.5	5.5	5.5	2.5
600			5.5	2.5	5.5	2.5
700			5.5	2.5	5.5	2.5
800			5.5	2.5	2.5	2.5
900			2.5	2.5	2.5	2.5
1000	5.5	2.5	2.5	2.5	2.5	4.5
1100			2.5		2.5	4.5
1200			2.5	4.5	2.5	4.5
1400			2.5	4.5	2.5	6
1600	2.5	2.5	2.5	6	4.5	8
1800			2.5	6	4.5	8
2000	2.5	4.5	4.5	8	4.5	8

The benefits

- No extra adjustment time during installation
- Optimal water flow in the radiator
- Higher efficiency of the condensing boiler through lower return temperatures
- Environmentally friendly
- Lower energy costs
- Compliance with Rule EnEV for hydraulic balance

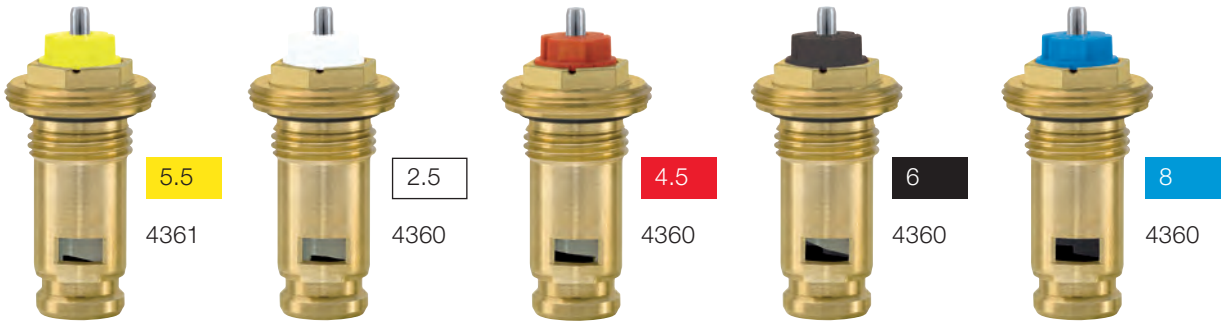

Factory presetting conditions: - heat outputs at 70/55/20ºC (Δt = 15°C) - pressure drop Δp = 100mbar

For other system conditions, the valve can be readjusted (or replaced) according to preset tables 4360 and 4361 (using preset key - part of the hardware pack).

In one pipe systems the valve must be fully opened (position 8).

Valve re-adjustment

Fine tuning valve 4361

Max. 2 K presetting

4361

Q̇ [W]		200	250	300	400	500	600	700	800	900	1000	1200	1400	1600	1800	2000	2200	2400	2600	2800	3000	3200	3400	3600	3800	4000	4800	5300	6500	6800	7200
Δt [K]	Δp [mbar]																														
	50	3	5	6	7	8	8																								
10	100	1	3	4	5	6	7	8	8	8																					
	150	1	1	3	4	6	6	7	7	8	8																				
	50	1	3	3	5	6	7	7	8	8	8																				
15	100	1	1	1	3	5	5	6	6	7	8	8	8																		
	150	1	1	1	1	3	4	5	6	6	6	7	8	8																	
	50	1	1	1	3	5	6	6	7	7	8	8																			
20	100	1	1	1	1	3	4	5	5	6	6	7	8	8	8																
	150		1	1	1	1	3	3	4	5	6	6	7	7	8	8	8														
	50		1	1	1	1	1	3	3	4	5	6	6	7	7	8	8	8	8												
40	100				1	1	1	1	1	3	3	4	5	5	6	6	6	7	7	8	8	8	8	8	8						
	150					1	1	1	1	1	1	3	3	4	5	6	6	6	6	7	7	7	8	8	8	8	8				

100 mbar = 10kPA = 1mWS

Example:

- Target: presetting
- Given:
  - RADICAL radiator: K1, Height 600, Length 700
  - factory fitted valve: 4361 - preset: 5.5
  - at 75/65/20°C: - 776 Watt
    - Δt = 10°C (=75-65)
  - pressure drop: - Δp = 100mbar
  - selected tuning range: - 2K (see table)
- Solution: presetting according to table 4361: 8

Valve needs to be re-adjusted to setting 8

5.5 >>> 8

4361 4361

Valve re-adjustment

Standard valve 4360

Max. 2 K presetting — 4360

Δt [K]	Δp [mbar]	Q̇ [W] 200	250	300	400	500	600	700	800	900	1000	1200	1400	1600	1800	2000	2200	2400	2600	2800	3000	3200	3400	3600	3800	4000	4800	5300	6500	6800	7200
	50	1	1	1	2	2	3	3	3	4	5	5	6	7	8																
10	100	1	1	1	1	2	2	2	2	3	3	4	5	5	6	6	7	7	8												
	150		1	1	1	1	2	2	2	2	3	3	4	4	5	5	6	6	7	7	8	8									
	50		1	1	1	1	2	2	2	3	3	3	4	5	5	6	6	7	8	8											
15	100			1	1	1	1	1	2	2	2	2	3	3	4	4	5	5	6	6	6	7	7	7	8	8					
	150				1	1	1	1	1	2	2	2	2	3	3	3	4	4	5	5	5	6	6	6	6	7	8				
	50			1	1	1	1	2	2	2	2	3	3	3	4	5	5	5	6	6	7	7	7	8	8						
20	100				1	1	1	1	1	1	2	2	2	2	3	3	3	4	4	5	5	5	5	6	6	6	7	8			
	150					1	1	1	1	1	1	2	2	2	2	3	3	3	3	4	4	4	4	5	5	5	6	7	8		
	50						1	1	1	1	1	1	2	2	2	2	2	3	3	3	3	3	4	4	4	5	5	6	7	7	8
40	100								1	1	1	1	1	1	1	2	2	2	2	2	2	2	3	3	3	3	4	4	5	5	6
	150										1	1	1	1	1	1	1	2	2	2	2	2	2	2	2	3	3	3	4	4	5

100 mbar = 10kPA = 1mWS

Example:

- Target: presetting
- Given:
  - RADICAL radiator: K2, Height 600, Length 1200
  - factory fitted valve: 4360 - preset: 4.5
  - 60/40/20°C - 997 Watt
  - pressure drop: - Δp = 100mbar
  - selected tuning range - 2K (see table)
- SOLUTION: PRESETTING ACCORDING TO TABLE 4360: “ 2 “

4.5 >>> “2”

4360 4360

Pressure drop diagram

Fine tuning valve 4361

Radiators without connection accessories

5.5

Information supplied by Heimeier

p-band [xp] **2,0 K**

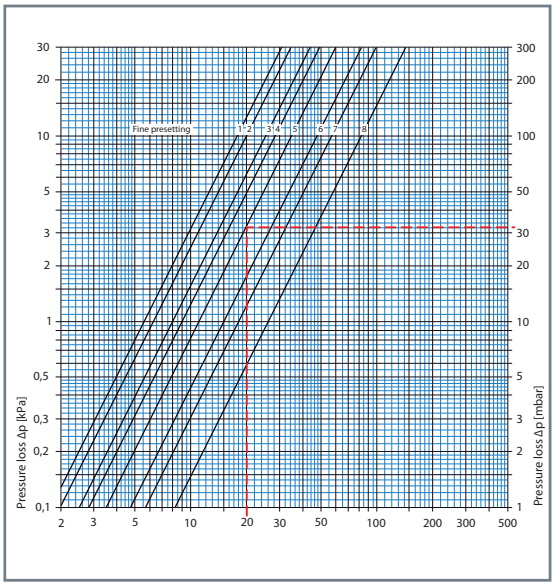

Radiator with integrated valves without connection fitting			Fine presetting Thermostatic insert 1	2	3	4	5	6	7	8	Permissible operating temperature TB *) [°C]	Permissible operating pressure PB [bar]	Permissible differential pressure at which the valve still closes Δp [bar] Therm. head	EMO T/NC EMOtec/NC EMO 1/3 EMO EIB/LON	EMO T/NO EMOtec/NO
Thermostatic insert and thermostatic head	p-band	K_V-Value [m³/h]	0,05	0,06	0,07	0,08	0,10	0,11	0,12	0,14	120	10	4,0	2,7	3,5
	p-band xp 2,0 K	K_V-Value [m³/h]	0,06	0,06	0,08	0,09	0,11	0,15	0,18	0,26					
		k_{VS}-Value [m³/h]	0,06	0,07	0,08	0,10	0,12	0,17	0,25	0,50					
		Flow tolerance ± [%]	42	42	37	36	35	32	30	10					

*) With protective cap or actuator 100°C

Calculation example

Target:	Setting range	
Given:	Heat flow	$\dot{Q}$ = 350 W
	Temperature spread	Δt = 15 K (65/50 °C)
	Pressure loss, radiator, with integrated valves	Δp_V = 32 mbar
Solution:	Mass flow rate	$\dot{m} = \frac{\dot{Q}}{c \cdot \Delta t} = \frac{350}{1{,}163 \cdot 15} = 20$ kg/h

Pressure drop diagram

Standard valve 4360

Radiators without connection accessories

2.5

4.5

6

8

Information supplied by Heimeier

p-band[xp] **2,0 K**

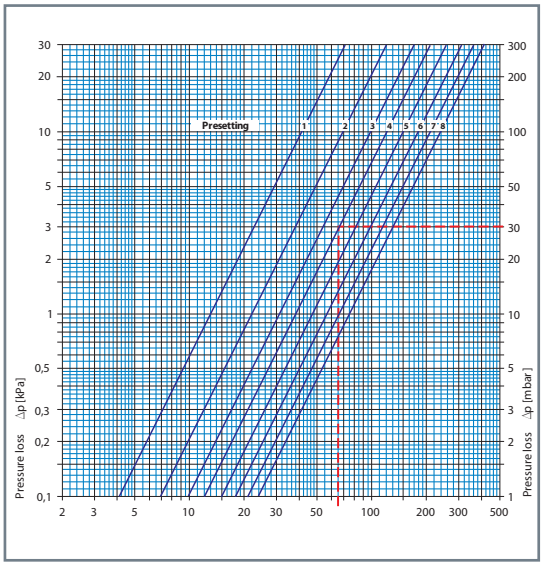

Radiator with integrated valves without connection fitting			Presetting Thermostatic insert 1	2	3	4	5	6	7	8	Permissible operating temperature TB *) [°C]	Permissible operating pressure PB [bar]	Permissible differential pressure at which the valve still closes Δp [bar] Therm. head	EMO T/NC EMOtec/NC EMO 1/3 EMO EIB/LON	EMO T/NO EMOtec/NO
Thermostatic insert and thermostatic head	p-band	K_V value [m³/h]	0,12	0,19	0,24	0,28	0,33	0,37	0,39	0,40	120	10	4,0	2,7	3,5
	p-band xp2,0 K	K_V value [m³/h]	0,13	0,22	0,31	0,38	0,47	0,57	0,66	0,75					
		k_{VS} value [m³/h]	0,16	0,27	0,38	0,43	0,65	0,98	1,23	1,43					
		Flow tolerance ± [%]	40	30	25	23	17	15	12	10					

*) With protective cap or actuator 100 °C.

Calculation example

Target: Setting range

Given: Heat flow $\dot{Q}$ = 1135 W
Temperature spread Δt = 15 K (65/50 °C)
Pressure loss, radiator with integrated valves Δp_V = 30 mbar

Solution: Mass flow rate

$$\dot{m} = \frac{\dot{Q}}{c \cdot \Delta t} = \frac{1135}{1{,}163 \cdot 15} = 65 \text{ kg/h}$$

Stelrad Radical

50Δt (75/65/20°C)

K1

K2

Height	Length mm	Straight 10mm UIN	Angle 10mm UIN	Straight 15mm UIN	Angle 15mm UIN	Heat output Watts	Heat output Btu/hr	Straight 10mm UIN	Angle 10mm UIN	Straight 15mm UIN	Angle 15mm UIN	Heat output Watts	Heat output Btu/hr
300	1000	33111010S	33111010A	33111015S	33111015A	509	1737	33221010S	33221010A	33221015S	33221015A	933	3183
500	400	35110410S	35110410A	35110415S	35110415A	333	1136	35220410S	35220410A	35220415S	35220415A	560	1911
	500	35110510S	35110510A	35110515S	35110515A	417	1423	35220510S	35220510A	35220515S	35220515A	701	2392
	600	35110610S	35110610A	35110615S	35110615A	500	1706	35220610S	35220610A	35220615S	35220615A	841	2869
	700	-	-	-	-	-	-	35220710S	35220710A	35220715S	35220715A	981	3347
	800	-	-	-	-	-	-	35220810S	35220810A	35220815S	35220815A	1121	3825
	900	-	-	-	-	-	-	35220910S	35220910A	35220915S	35220915A	1261	4303
	1000	-	-	-	-	-	-	35221010S	35221010A	35221015S	35221015A	1401	4780
	1200	-	-	-	-	-	-	35221210S	35221210A	35221215S	35221215A	1681	5736
	1400	-	-	-	-	-	-	35221410S	35221410A	35221415S	35221415A	1961	6691
	1600	-	-	-	-	-	-	35221610S	35221610A	35221615S	35221615A	2242	7650
	1800	-	-	-	-	-	-	35221810S	35221810A	35221815S	35221815A	2522	8605
	2000	-	-	-	-	-	-	35222010S	35222010A	35222015S	35222015A	2802	9560
600	400	36110410S	36110410A	36110415S	36110415A	392	1338	36220410S	36220410A	36220415S	36220415A	647	2208
	500	36110510S	36110510A	36110515S	36110515A	490	1672	36220510S	36220510A	36220515S	36220515A	809	2760
	600	36110610S	36110610A	36110615S	36110615A	588	2006	36220610S	36220610A	36220615S	36220615A	970	3310
	700	-	-	-	-	-	-	36220710S	36220710A	36220715S	36220715A	1132	3862
	800	-	-	-	-	-	-	36220810S	36220810A	36220815S	36220815A	1294	4415
	900	-	-	-	-	-	-	36220910S	36220910A	36220915S	36220915A	1455	4964
	1000	-	-	-	-	-	-	36221010S	36221010A	36221015S	36221015A	1617	5517
	1100	-	-	-	-	-	-	36221110S	36221110A	36221115S	36221115A	1779	6070
	1200	-	-	-	-	-	-	36221210S	36221210A	36221215S	36221215A	1940	6619
	1400	-	-	-	-	-	-	36221410S	36221410A	36221415S	36221415A	2264	7725
	1600	-	-	-	-	-	-	36221610S	36221610A	36221615S	36221615A	2587	8827
	1800	-	-	-	-	-	-	36221810S	36221810A	36221815S	36221815A	2911	9932
	2000	-	-	-	-	-	-	36222010S	36222010A	36222015S	36222015A	3234	11034

Δt50 is the UK's industry standard for heating outputs, which has an operating temperature of 75/65/20°C if you have a low temperature heat source you may wish to consider Δt40 or Δt30 output (see your installer or system designer).

40Δt (65/55/20°C)

K1

K2

Height	Length mm	Straight 10mm UIN	Angle 10mm UIN	Straight 15mm UIN	Angle 15mm UIN	Heat output Watts	Heat output Btu/hr	Straight 10mm UIN	Angle 10mm UIN	Straight 15mm UIN	Angle 15mm UIN	Heat output Watts	Heat output Btu/hr
300	1000	33111010S	33111010A	33111015S	33111015A	381	1299	33221010S	33221010A	33221015S	33221015A	969	2381
500	400	35110410S	35110410A	35110415S	35110415A	249	850	35220410S	35220410A	35220415S	35220415A	419	1429
	500	35110510S	35110510A	35110515S	35110515A	312	1064	35220510S	35220510A	35220515S	35220515A	524	1789
	600	35110610S	35110610A	35110615S	35110615A	374	1276	35220610S	35220610A	35220615S	35220615A	629	2146
	700	-	-	-	-	-	-	35220710S	35220710A	35220715S	35220715A	734	2504
	800	-	-	-	-	-	-	35220810S	35220810A	35220815S	35220815A	839	2861
	900	-	-	-	-	-	-	35220910S	35220910A	35220915S	35220915A	943	3218
	1000	-	-	-	-	-	-	35221010S	35221010A	35221015S	35221015A	1048	3576
	1200	-	-	-	-	-	-	35221210S	35221210A	35221215S	35221215A	1257	4290
	1400	-	-	-	-	-	-	35221410S	35221410A	35221415S	35221415A	1467	5005
	1600	-	-	-	-	-	-	35221610S	35221610A	35221615S	35221615A	1677	5722
	1800	-	-	-	-	-	-	35221810S	35221810A	35221815S	35221815A	1886	6437
	2000	-	-	-	-	-	-	35222010S	35222010A	35222015S	35222015A	2096	7151
600	400	36110410S	36110410A	36110415S	36110415A	293	1000	36220410S	36220410A	36220415S	36220415A	484	1651
	500	36110510S	36110510A	36110515S	36110515A	367	1251	36220510S	36220510A	36220515S	36220515A	605	2065
	600	36110610S	36110610A	36110615S	36110615A	440	1501	36220610S	36220610A	36220615S	36220615A	726	2476
	700	-	-	-	-	-	-	36220710S	36220710A	36220715S	36220715A	847	2889
	800	-	-	-	-	-	-	36220810S	36220810A	36220815S	36220815A	968	3303
	900	-	-	-	-	-	-	36220910S	36220910A	36220915S	36220915A	1088	3713
	1000	-	-	-	-	-	-	36221010S	36221010A	36221015S	36221015A	1210	4127
	1100	-	-	-	-	-	-	36221110S	36221110A	36221115S	36221115A	1331	4540
	1200	-	-	-	-	-	-	36221210S	36221210A	36221215S	36221215A	1451	4951
	1400	-	-	-	-	-	-	36221410S	36221410A	36221415S	36221415A	1693	5778
	1600	-	-	-	-	-	-	36221610S	36221610A	36221615S	36221615A	1935	6602
	1800	-	-	-	-	-	-	36221810S	36221810A	36221815S	36221815A	2177	7429
	2000	-	-	-	-	-	-	36222010S	36222010A	36222015S	36222015A	2419	8254

Stelrad Radical

30Δt (55/45/20°C)

K1

K2

Height	Length mm	Straight 10mm UIN	Angle 10mm UIN	Straight 15mm UIN	Angle 15mm UIN	Heat output Watts	Heat output Btu/hr	Straight 10mm UIN	Angle 10mm UIN	Straight 15mm UIN	Angle 15mm UIN	Heat output Watts	Heat output Btu/hr
300	1000	33111010S	33111010A	33111015S	33111015A	262	894	33221010S	33221010A	33221015S	33221015A	480	1639
500	400	35110410S	35110410A	35110415S	35110415A	171	585	35220410S	35220410A	35220415S	35220415A	288	984
	500	35110510S	35110510A	35110515S	35110515A	215	733	35220510S	35220510A	35220515S	35220515A	361	1232
	600	35110610S	35110610A	35110615S	35110615A	258	879	35220610S	35220610A	35220615S	35220615A	433	1478
	700	-	-	-	-	-	-	35220710S	35220710A	35220715S	35220715A	505	1724
	800	-	-	-	-	-	-	35220810S	35220810A	35220815S	35220815A	577	1970
	900	-	-	-	-	-	-	35220910S	35220910A	35220915S	35220915A	649	2216
	1000	-	-	-	-	-	-	35221010S	35221010A	35221015S	35221015A	722	2462
	1200	-	-	-	-	-	-	35221210S	35221210A	35221215S	35221215A	866	2954
	1400	-	-	-	-	-	-	35221410S	35221410A	35221415S	35221415A	1010	3446
	1600	-	-	-	-	-	-	35221610S	35221610A	35221615S	35221615A	1155	3940
	1800	-	-	-	-	-	-	35221810S	35221810A	35221815S	35221815A	1299	4432
	2000	-	-	-	-	-	-	35222010S	35222010A	35222015S	35222015A	1443	4924
600	400	36110410S	36110410A	36110415S	36110415A	202	689	36220410S	36220410A	36220415S	36220415A	333	1137
	500	36110510S	36110510A	36110515S	36110515A	252	861	36220510S	36220510A	36220515S	36220515A	417	1432
	600	36110610S	36110610A	36110615S	36110615A	303	1033	36220610S	36220610A	36220615S	36220615A	500	1704
	700	-	-	-	-	-	-	36220710S	36220710A	36220715S	36220715A	583	1989
	800	-	-	-	-	-	-	36220810S	36220810A	36220815S	36220815A	666	2274
	900	-	-	-	-	-	-	36220910S	36220910A	36220915S	36220915A	749	2557
	1000	-	-	-	-	-	-	36221010S	36221010A	36221015S	36221015A	833	2841
	1100	-	-	-	-	-	-	36221110S	36221110A	36221115S	36221115A	916	3126
	1200	-	-	-	-	-	-	36221210S	36221210A	36221215S	36221215A	999	3409
	1400	-	-	-	-	-	-	36221410S	36221410A	36221415S	36221415A	1166	3978
	1600	-	-	-	-	-	-	36221610S	36221610A	36221615S	36221615A	1332	4546
	1800	-	-	-	-	-	-	36221810S	36221810A	36221815S	36221815A	1499	5115
	2000	-	-	-	-	-	-	36222010S	36222010A	36222015S	36222015A	1666	5683

Each code includes the radiator of choice, with a hydro block and coupling piece.

2 hydro blocks are available; either straight configuration for pipes coming from the floor or angle configuration for pipes coming from the wall. 2 coupling pieces are available, either 10mm or 15mm to connect the H Block to flow and return pipe.

EN 442 Certification Data - CETIAT tested in accordance with BS EN 442

Type	K1			K2		
Height	300	500	600	300	500	600
W/m at 75/65/20	509	833	980	933	1401	1617
n-coefficients	1.32	1.30	1.29	1.30	1.30	1.30
Heated Surface Area (m²/m)	2.09	3.80	4.66	3.51	6.33	7.74
Weight (kg/m)	9.31	16.24	19.70	16.50	27.17	32.50
Water Contents (l/m)	1.89	2.80	3.25	3.70	5.83	6.90

Simple and efficient installation across the whole system.

K1

K2

K1 - right

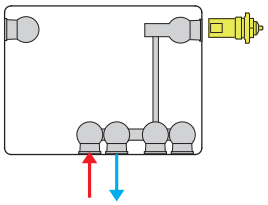

K2 - left

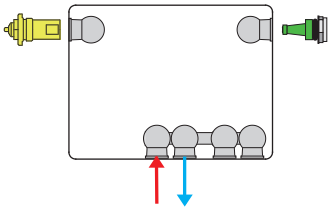

K3 - right

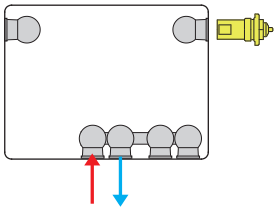

K1 front elevation

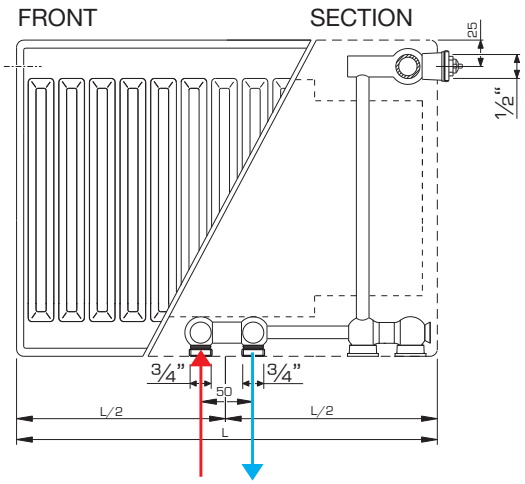

K2 front elevation

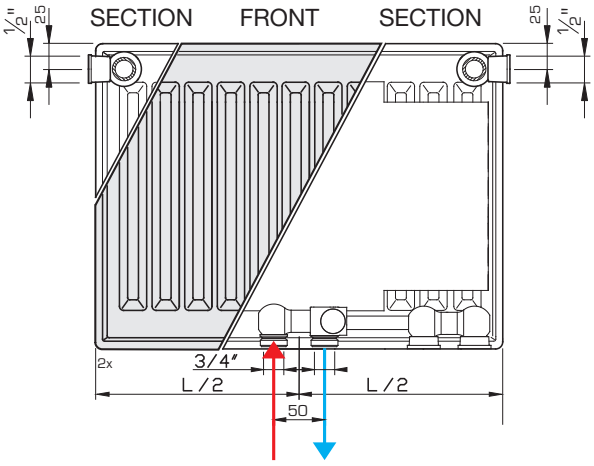

Radiator on short bracket side		Radiator on long bracket side	
K1 (T11)	K2 (T22)	K1 (T11)	K2 (T22)
83 / 61 / 51	124 / 100 / 73	94 / 61 / 62	135 / 100 / 84

K1

L	A
400	117
500-1100	150

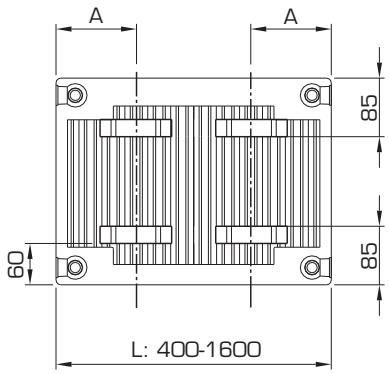

K2

L	A
400	133
500-1100	133
1200-1600	267
1800-2000 **	267 **

** 3rd. lug in radiator centre (half length)

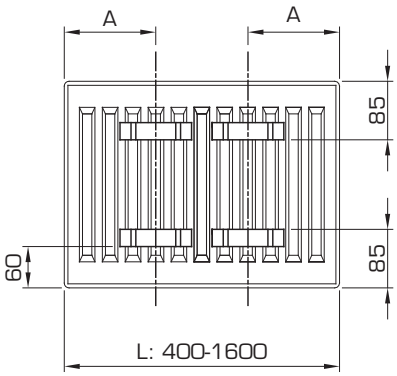

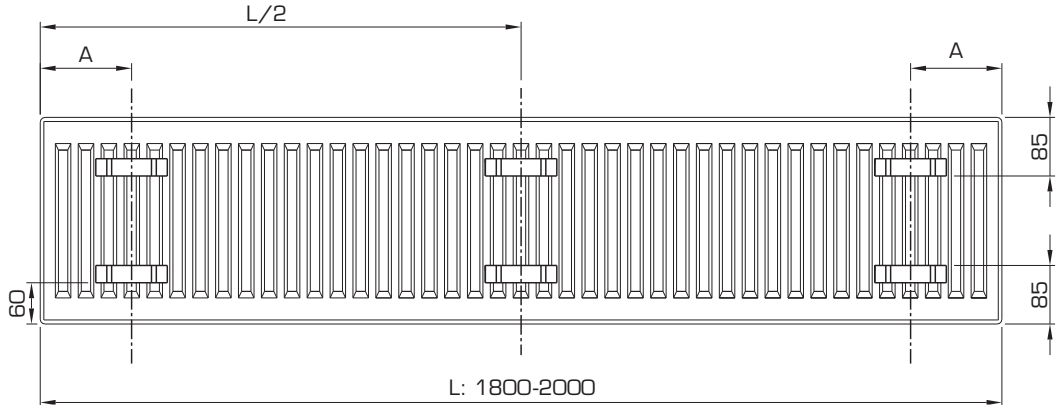

Radical mounting template

Using the mounting template for the bottom connection of Radical radiators offers important advantages during the installation, e.g. leak testing the system without a mounted radiator.

The mounting template replaces the radiator during the installation, which reduces the total installing cost. Finishing tasks such as painting, tiling and applying wallpaper no longer require the removal and remounting of the radiator.

The radiator is mounted after all the finishing work, which guarantees a pristine condition on commissioning.

The mounting template consists of a bridging piece with 2 connections of ¾" external thread on a centre distance of 50mm. As the wall distance depends on the radiator type, the mounting template offers multiple positions according to the available brackets.

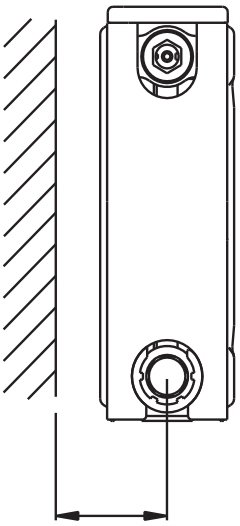

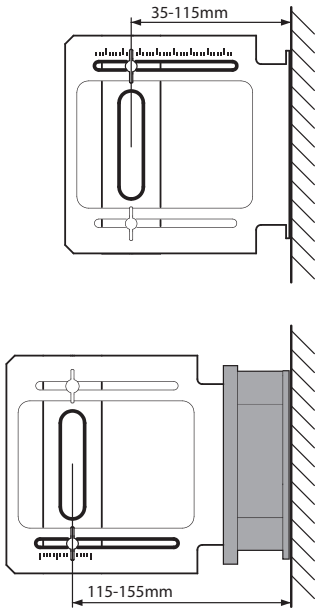

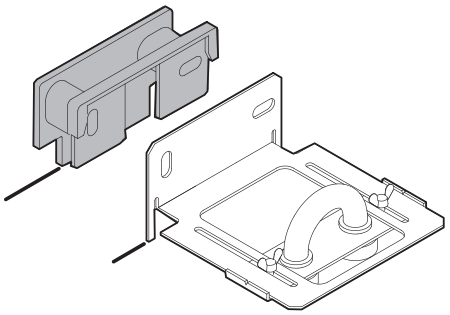

UIN: 9223

Radical mounting template

To mount of the template on the wall, the plumbing should have the correct wall distance.

Connect the plumbing to the template and conduct the leak test.

Once the concrete floor is finished the L-shaped part (and the extension) can be removed in order to paint, tile, to apply wallpaper.
ATTENTION: the bridging part must remain on the plumbing to prevent pollution of the tubes.

Mount the brackets against the wall and remove the bridging part before the radiator can be installed. Note: Brackets should be mounted before removal of the bridging part, to eliminate any possibility of pollution.

ATTENTION: the mounting template has a ¾" ext eurocone thread, for radiators with a ½" INT bottom connection, a ½" EXT x ¾" EXT piece is necessary.

For ½" INT - bottom connection (right, centre or left)

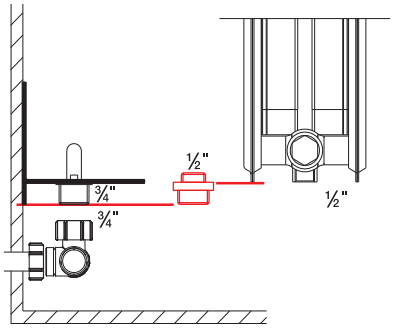

The mounting template can be used for tubes coming from the floor, as well as for tubes coming from the wall.

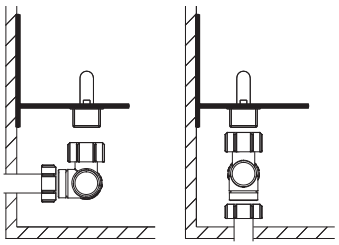

Radical Hydro Block connections

2-pipe connections for bottom connection (¾" EXT Eurocone or ½" INT):

- Lock function
- Straight or angular version
- Maximum operating temperature: 90°C
- Casing in white high performance plastic (similar to RAL 9016)
- Maximum operating pressure: 6 bar

UIN: 10mm 363000210A
UIN: 15mm 363000215A
- angular version
- with drain

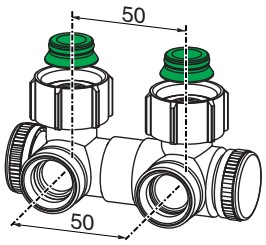

- not included
- parts unlock drain function

UIN: 10mm 363000210S
UIN: 15mm 363000215S
- straight version
- with drain

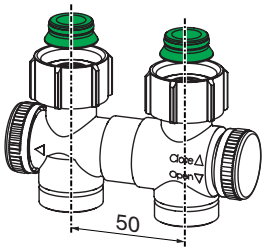

- not included
- parts unlock drain function

For ¾" EXT Eurocone bottom connection (centre):

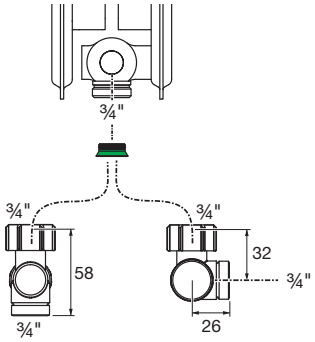

Safety

Stelrad has created a range of Low Surface Temperature radiators which provide the perfect solution for all specification requirements in safety critical environments.

The complete choice

Stelrad LST range offers you the flexibility you need

- The LST Standard leaves you free to specify your preferred controls
- The LST Plus and LST i Plus offer an integral remote sensing thermostat valve, the highly specified Danfoss RAS-D Remote Sensor
- The LST Vertical is ideal where space is at a premium
- An arthritic adaptor is supplied as standard for less able environments - along with a lockshield valve which can only be adjusted with a 6mm Allen key, hidden with a neat metal dust cover to discourage unauthorised tampering. (excludes LST Standard)

The complete package

- Every Stelrad LST radiator is supplied with an attractive, flat panel outer casing, which is totally reversible to allow piping flexibility
- Simple and quick to install, the casing is held by security fittings with a unique seam fixing bracket system to prevent unauthorised access to the emitter accommodated inside
- For added protection, the smooth surface is coated in anti-bacterial paint
- The emitter provides high outputs through convection for outstanding heating performance
- Controlled independent laboratory testing ensures that each emitter is guaranteed to perform to a maximum working pressure of 116 psi (8 bar) and conform to BS EN 442, the European Standard for radiators
- All specified components required supplied in one robust package

Anti-bacterial paint

- Every LST emitter is subjected to a multi-stage cleaning process before the paint is applied. This involves several rinsing stages, including an iron phosphate and demineralisation phase

  The first coat of paint is applied by electrophoresis and the radiator is then stoved and cooled
- Followed by a second powder coat in warm white, the emitter then goes through a final curing stage. It is then allowed to cool prior to packaging
- All exposed painted surfaces are finished in a long lasting anti-bacterial coating

LST Plus & LST i Plus

Remote sensing thermostatic valve

- The Danfoss RAS-D Remote Sensor is designed specifically for commercial heating systems and can be pre-set to allow adjustment of room temperature between 5°C and 26°C
- Special tools are not required, as the valve is gland seal removable
- Suitable for both ½" steel and 15mm copper piping, with left or right hand, same end connections for flow and return, gives flexibility of installation

Lockshield valve

- Able to withstand 10 bar static pressure, the valve has a drain tap adaptor available, which can also be used as a filling point
- Mandatory fittings should be used in order to comply with current water regulations

Connections

- 2 x ½" connections as standard, complete with Danfoss remote sensing thermostatic radiator valve, pre-piped with 2 x ½" BSP connections at 50mm centres positioned at either left or right of the casing

5 FIVE YEAR WARRANTY ON CASING

10 TEN YEAR WARRANTY ON EMITTER

EN EURONORM 442

CE

CP

BIM

For further information and advice call 0844 543 6200

LST Standard, LST Plus, LST i Plus & LST Vertical temperature table

For systems not operating at Δt50 the factors in the table below should be applied. The output of a given radiator can be obtained by multiplying the quoted Δt50 output by the operating factor. Conversely, to derive a non Δt50 output, divide the heat output required by the relevant operation factor. This 'Δt50 equivalent output' can then be used to select a radiator from the standard tables.

°C		°F	
Δt	Operating Factor	Δt	Operating Factor
5	0.050	10	0.057
10	0.123	20	0.142
15	0.209	30	0.240
20	0.304	40	0.348
25	0.406	50	0.466
30	0.515	60	0.590
35	0.629	70	0.721
40	0.748	80	0.858
45	0.872	90	1.000
50	1.000	100	1.147
55	1.132	110	1.298
60	1.267	120	1.454
65	1.406	130	1.613
70	1.549	150	1.776
75	1.694	-	-

Example: Exact output at Δt50 = 2000 Btu/hr
Output at Δt30 = 2000 x 0.515 = 1030 Btu/hr
Average coefficient of 130 is used in the example above

Testing and operating pressures

All models are high pressure tested to withstand 152.3 psi (10.5 bar). Strictly controlled independent laboratory testing ensures that all Stelrad radiators are guaranteed to perform to a maximum working pressure of 116 psi (8 bar) at a maximum temperature of 95°C. All conform to BS EN 442 - the European Standard for radiators.

Caution

To ensure that the emitter complies with all aspects of the NHS guidance for "Safe hot water and surface temperature", Stelrad recommends that a maximum flow temperature of 80° be used with a 20° drop across the system.

When designing for domestic systems we recommend that the Stelrad LST range be used only in heating systems complying with the British Standard Code of Practice for Central Heating for Domestic Premises BS EN 12828:2003 and BS EN 12831:2003.

Single feed, indirect cylinders are not recommended as should interchange of water occur, fresh aerated water would enter the heating system, resulting in corrosion.

Water treatment

On completion of the installation, the system should be properly flushed and filled in accordance with the British Standard Code of Practice BS 7593:2006 for the Treatment of Water in Domestic Hot Water Central Heating Systems, Part L of Building Regulations and Good Practice Guidance for Scotland.

After installation of a new Stelrad radiator the central heating system should be cleaned and flushed with cleaner to remove existing contaminants, flux residue and other installation debris which, if left, can cause damage to the new radiator. Afterwards, treat the system with an inhibitor to ensure long term protection against corrosion and limescale.

A comprehensive range of quality chemicals including inhibitors, cleaners, leak sealers and noise reducers that protect and maintain central heating systems can be obtained from:

Sentinel Performance Solutions Ltd
The Heath Business & Technical Park, Runcorn,
Cheshire WA7 4QX
Tel: 01928 588 330 (UK) www.sentinel-solutions.net

Fernox - Cookson Electronics,
Forsyth Road, Sheerwater, Woking, Surrey
GU21 5RZ www.fernox.com

Pressure drops

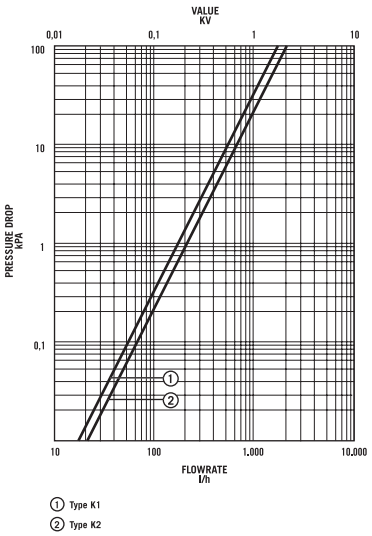

Stelrad LST Range Standard

50 Δt (75/65/20°C)

K1 P+ K2

Casing Height	Casing Length mm	Emitter Height mm	Emitter Length mm	K1 UIN	K1 Heat output Watts	K1 Heat output Btu/hr	P+ UIN	P+ Heat output Watts	P+ Heat output Btu/hr	K2 UIN	K2 Heat output Watts	K2 Heat output Btu/hr
500	560	300	400	145000	196	669	145008	284	969	145016	348	1187
	760	300	600	145001	293	1000	145009	426	1454	145017	522	1781
	960	300	800	145002	391	1334	145010	568	1938	145018	696	2375
	1160	300	1000	145003	489	1668	145011	710	2423	145019	870	2968
	1360	300	1200	145004	587	2003	145012	852	2907	145020	1044	3562
	1560	300	1400	145005	685	2337	145013	994	3392	145021	1218	4156
	1760	300	1600	145006	782	2668	145014	1136	3876	145022	1392	4750
	1960	300	1800	145007	880	3003	145015	1278	4361	145023	1566	5343
650	560	450	400	145024	290	989	145032	386	1317	145040	478	1631
	760	450	600	145025	435	1484	145033	580	1979	145041	717	2446
	960	450	800	145026	580	1979	145034	773	2637	145042	956	3262
	1160	450	1000	145027	725	2474	145035	966	3296	145043	1195	4077
	1360	450	1200	145028	870	2968	145036	1159	3955	145044	1434	4893
	1560	450	1400	145029	1015	3463	145037	1352	4613	145045	1673	5708
	1760	450	1600	145030	1160	3958	145038	1546	5275	145046	1912	6524
	1960	450	1800	145031	1305	4453	145039	1739	5933	145047	2151	7341
800	560	600	400	145048	365	1245	145056	501	1709	145064	615	2098
	760	600	600	145049	548	1870	145057	751	2562	145065	922	3146
	960	600	800	145050	730	2493	145058	1002	3419	145066	1230	4197
	1160	600	1000	145051	913	3115	145059	1252	4272	145067	1537	5244
	1360	600	1200	145052	1096	3740	145060	1502	5125	145068	1844	6295
	1560	600	1400	145053	1278	4361	145061	1753	5981	145069	2152	7343
	1760	600	1600	145054	1461	4985	145062	2003	6837	145070	2459	8393
	1960	600	1800	145055	1643	5606	145063	2254	7691	145071	2767	9441

Δt50 is the UK's industry standard for heating outputs, which has an operating temperature of 75/65/20°C if you have a low temperature heat source you may wish to consider Δt40 or Δt30 output (see your installer or system designer).

40 Δt (65/55/20°C)

K1 P+ K2

Casing Height	Casing Length mm	Emitter Height mm	Emitter Length mm	K1 UIN	K1 Heat output Watts	K1 Heat output Btu/hr	P+ UIN	P+ Heat output Watts	P+ Heat output Btu/hr	K2 UIN	K2 Heat output Watts	K2 Heat output Btu/hr
500	560	300	400	145000	147	500	145008	212	725	145016	260	888
	760	300	600	145001	219	748	145009	319	1087	145017	390	1332
	960	300	800	145002	292	998	145010	425	1450	145018	521	1776
	1160	300	1000	145003	366	1248	145011	531	1812	145019	651	2220
	1360	300	1200	145004	439	1498	145012	637	2174	145020	781	2664
	1560	300	1400	145005	512	1748	145013	744	2537	145021	911	3109
	1760	300	1600	145006	585	1996	145014	850	2899	145022	1041	3553
	1960	300	1800	145007	658	2246	145015	956	3262	145023	1171	3997
650	560	450	400	145024	217	740	145032	289	985	145040	358	1220
	760	450	600	145025	325	1110	145033	434	1480	145041	536	1830
	960	450	800	145026	434	1480	145034	578	1973	145042	715	2440
	1160	450	1000	145027	542	1850	145035	723	2465	145043	894	3050
	1360	450	1200	145028	651	2220	145036	867	2958	145044	1073	3660
	1560	450	1400	145029	759	2590	145037	1011	3451	145045	1251	4270
	1760	450	1600	145030	868	2961	145038	1156	3946	145046	1430	4880
	1960	450	1800	145031	976	3331	145039	1301	4438	145047	1609	5490
800	560	600	400	145048	273	932	145056	375	1279	145064	460	1570
	760	600	600	145049	410	1399	145057	562	1917	145065	690	2353
	960	600	800	145050	546	1863	145058	749	2557	145066	920	3139
	1160	600	1000	145051	683	2330	145059	936	3195	145067	1150	3923
	1360	600	1200	145052	820	2797	145060	1123	3833	145068	1379	4706
	1560	600	1400	145053	956	3262	145061	1311	4474	145069	1610	5492
	1760	600	1600	145054	1093	3729	145062	1498	5112	145070	1839	6276
	1960	600	1800	145055	1229	4193	145063	1686	5753	145071	2070	7062

Stelrad LST Range Standard

30 Δt (55/45/20°C)

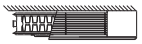

Casing Height	Casing Length mm	Emitter Height mm	Emitter Length mm	K1 UIN	K1 Watts	K1 Btu/hr	P+ UIN	P+ Watts	P+ Btu/hr	K2 UIN	K2 Watts	K2 Btu/hr
500	560	300	400	145200	101	344	145248	146	499	145224	179	611
	760	300	600	145201	151	515	145249	219	749	145225	269	917
	960	300	800	145202	201	687	145250	293	998	145226	358	1223
	1160	300	1000	145203	252	859	145251	366	1248	145227	448	1529
	1360	300	1200	145204	302	1031	145252	439	1497	145228	538	1834
	1560	300	1400	145205	353	1204	145253	512	1747	145229	627	2140
	1760	300	1600	145206	403	1374	145254	585	1996	145230	717	2446
	1960	300	1800	145207	453	1546	145255	658	2246	145231	806	2752
650	560	450	400	145208	149	510	145256	199	678	145232	246	840
	760	450	600	145209	224	764	145257	299	1019	145233	369	1260
	960	450	800	145210	299	1019	145258	398	1358	145234	492	1680
	1160	450	1000	145211	373	1274	145259	497	1697	145235	615	2100
	1360	450	1200	145212	448	1529	145260	597	2037	145236	739	2520
	1560	450	1400	145213	523	1784	145261	696	2376	145237	862	2940
	1760	450	1600	145214	597	2038	145262	796	2717	145238	985	3360
	1960	450	1800	145215	672	2293	145263	896	3056	145239	1108	3780
800	560	600	400	145216	188	641	145264	258	880	145240	317	1081
	760	600	600	145217	282	963	145265	387	1320	145241	475	1620
	960	600	800	145218	376	1283	145266	516	1761	145242	633	2161
	1160	600	1000	145219	470	1604	145267	645	2200	145243	792	2701
	1360	600	1200	145220	564	1926	145268	774	2639	145244	950	3240
	1560	600	1400	145221	658	2246	145269	903	3080	145245	1108	3781
	1760	600	1600	145222	752	2567	145270	1032	3520	145246	1266	4321
	1960	600	1800	145223	846	2887	145271	1161	3961	145247	1425	4862

EN 442 Certification Data - CETIAT tested in accordance with BS EN 442

Type	K1			P+			K2		
Casing Height	500	650	800	500	650	800	500	650	800
Emitter Height	300	450	600	300	450	600	300	450	600
W/m at 75/65/20	489	725	913	710	966	1252	870	1195	1537
n-coefficients	1.19	1.25	1.34	1.24	1.27	1.31	1.27	1.30	1.32
Heated Surface Area (m²/m)	2.09	3.37	4.66	2.44	3.84	5.24	3.51	5.62	7.74
Weight (kg/m)	17.80	23.50	29.40	22.70	30.72	38.40	24.40	33.30	42.50
Water Contents (l/m)	1.89	2.57	3.25	3.70	5.15	6.60	3.70	5.15	6.60

LST Standard wall fixings & bracket positions

All dimensions in mm. Inches in brackets.

Casing Length	Casing Height
560	500
760	650
960	800

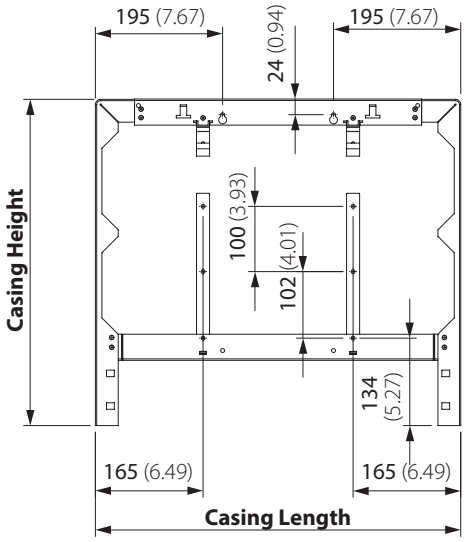

Casing Length	A	B
1160	445	475
1360	545	575
1560	645	675
1760	745	775
1960	845	875

Casing Height
500
650
800

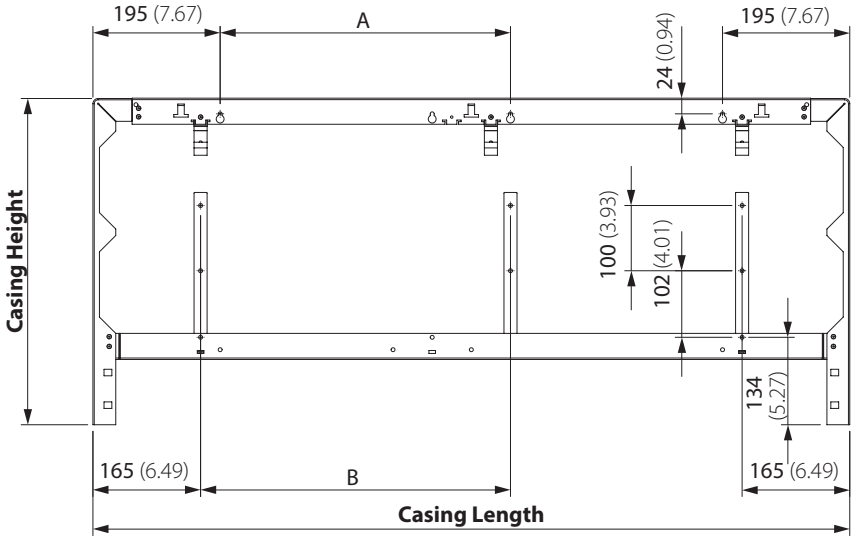

LST Standard connection options

All dimensions in mm. Inches in brackets.

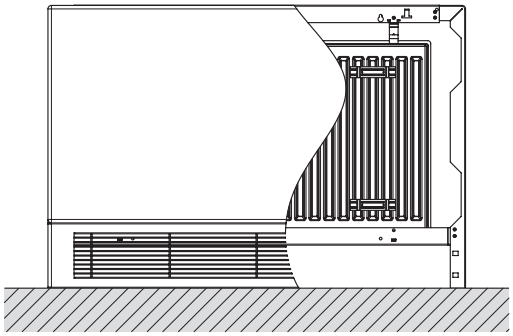

Casing Height	A
500	250
650	400
800	550

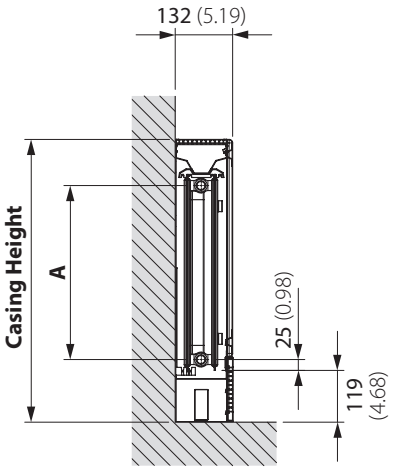

LST Standard piping options

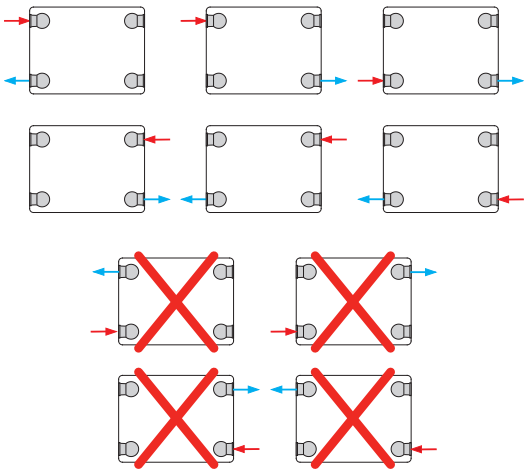

Stelrad LST Range Plus Vertical

50 Δt (75/65/20°C)

Casing Height	Casing Length mm	Emitter Height mm	Emitter Length mm	UIN	Heat output Watts	Heat output Btu/hr
2110	560	1800	400	142241	1271	4336
	660	1800	500	142242	1588	5418
	760	1800	600	142243	1855	6329

Δt50 is the UK's industry standard for heating outputs, which has an operating temperature of 75/65/20°C if you have a low temperature heat source you may wish to consider Δt40 or Δt30 output (see your installer or system designer).

LST Plus Vertical installation instructions

All dimensions in mm. Inches in brackets.

Present casing and bottom bracket to the wall and mark drill hole positions.

Fit pipework and valve connections to the radiators.

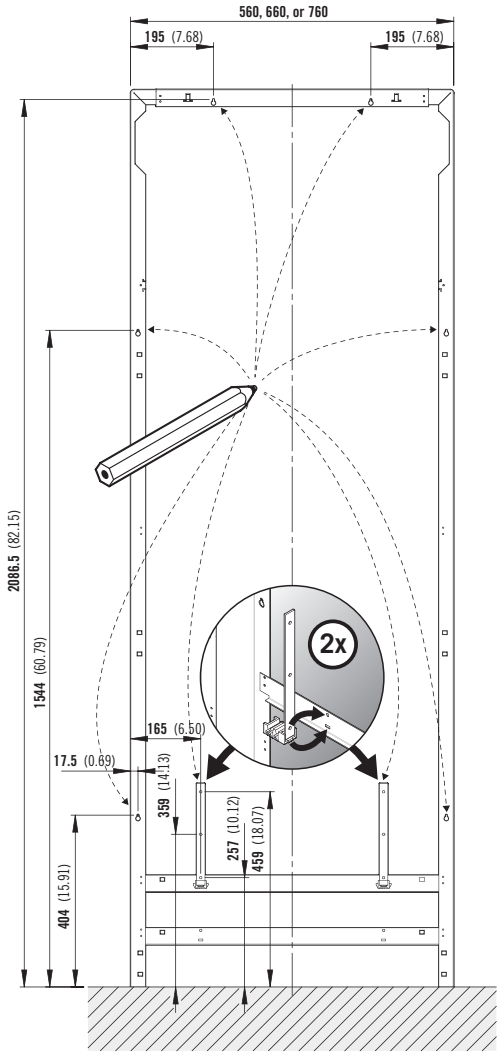

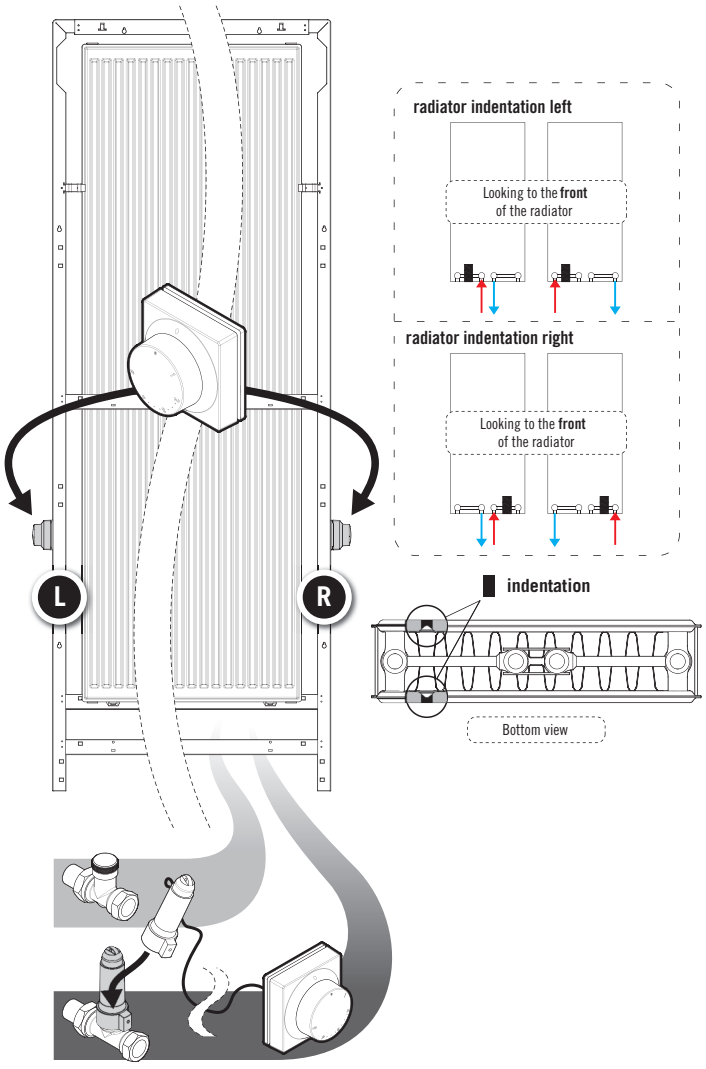

LST Plus Vertical connection options

All dimensions in mm. Inches in brackets.

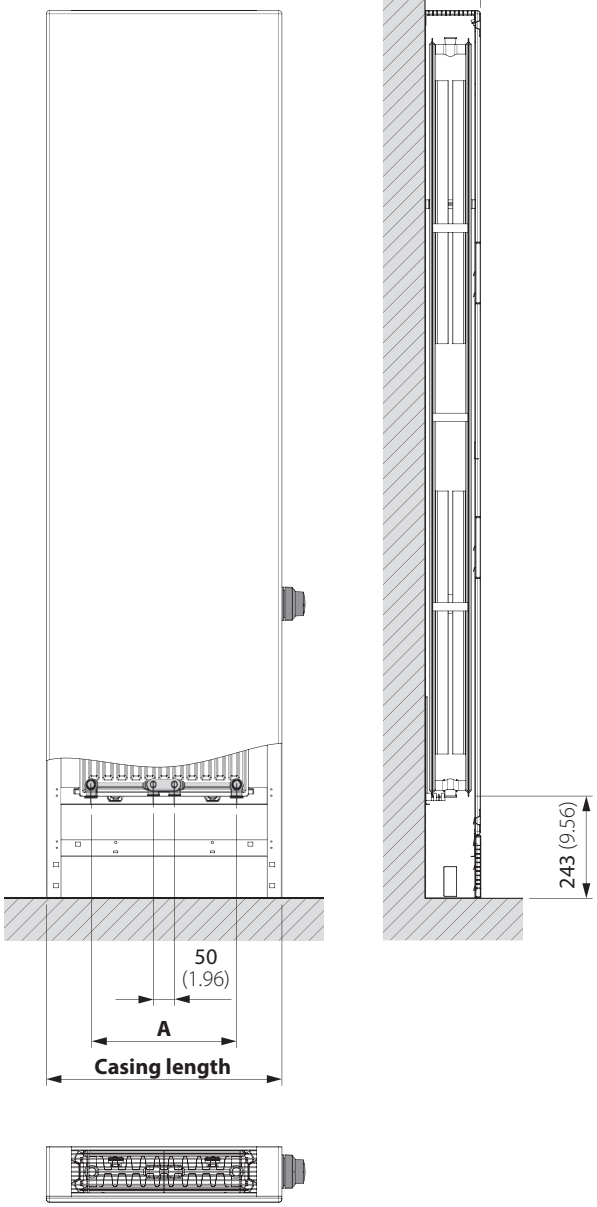

Casing Length	A
560	344
660	444
760	544

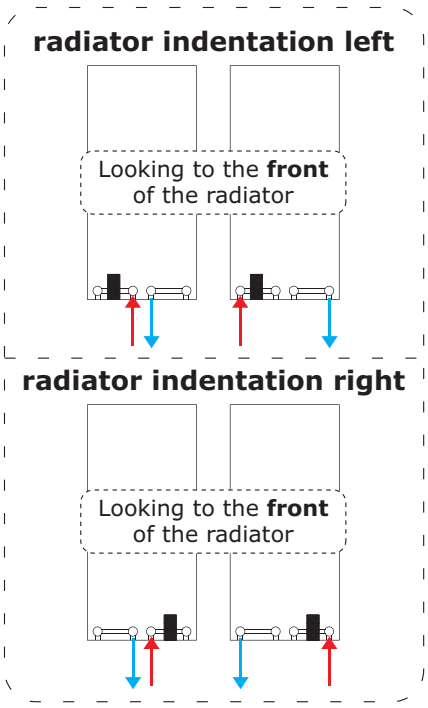

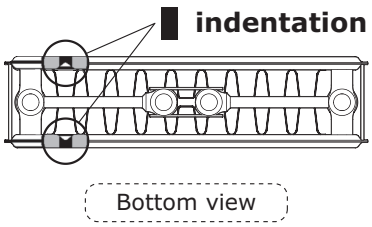

Stelrad LST Range Plus

50 Δt (75/65/20°C)

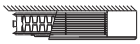

Casing Height	Casing Length mm	Emitter Height mm	Emitter Length mm	K1 UIN	K1 Heat output Watts	K1 Heat output Btu/hr	P+ UIN	P+ Heat output Watts	P+ Heat output Btu/hr	K2 UIN	K2 Heat output Watts	K2 Heat output Btu/hr
500*	650	300	400	142169	203	693	142217	290	989	142193	362	1235
	850	300	600	142170	304	1037	142218	435	1484	142194	542	1849
	1050	300	800	142171	406	1385	142219	580	1979	142195	723	2467
	1250	300	1000	142172	507	1730	142220	725	2474	142196	904	3084
	1450	300	1200	142173	608	2074	142221	870	2968	142197	1085	3702
	1650	300	1400	142174	710	2423	142222	1015	3463	142198	1266	4320
	1850	300	1600	142175	811	2767	142223	1160	3958	142199	1446	4934
	2050	300	1800	142176	913	3115	142224	1305	4453	142200	1627	5551
650**	650	400	400	142177	264	901	142225	388	1324	142201	456	1556
	850	400	600	142178	397	1355	142226	581	1982	142202	685	2337
	1050	400	800	142179	529	1805	142227	775	2644	142203	913	3115
	1250	400	1000	142180	661	2255	142228	969	3306	142204	1141	3893
	1450	400	1200	142181	793	2706	142229	1163	3968	142205	1369	4671
	1650	400	1400	142182	925	3156	142230	1357	4630	142206	1597	5449
	1850	400	1600	142183	1058	3610	142231	1550	5289	142207	1825	6227
	2050	400	1800	142184	1190	4060	142232	1744	5951	142208	2054	7008
750***	650	500	400	142185	336	1146	142233	461	1573	142209	558	1904
	850	500	600	142186	503	1716	142234	692	2361	142210	837	2856
	1050	500	800	142187	671	2289	142235	922	3146	142211	1116	3808
	1250	500	1000	142188	839	2863	142236	1153	3934	142212	1395	4760
	1450	500	1200	142189	1007	3436	142237	1384	4722	142213	1674	5712
	1650	500	1400	142190	1175	4009	142238	1614	5507	142214	1953	6664
	1850	500	1600	142191	1342	4579	142239	1845	6295	142215	2232	7616
	2050	500	1800	142192	1510	5152	142240	2075	7080	142216	2511	8568

*500 integral kick grille **650 height includes 150mm removable kick grille ***750 height includes 150mm removable kick grille

Δt50 is the UK's industry standard for heating outputs, which has an operating temperature of 75/65/20°C if you have a low temperature heat source you may wish to consider Δt40 or Δt30 output (see your installer or system designer).

40 Δt (65/55/20°C)

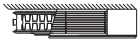

Casing Height	Casing Length mm	Emitter Height mm	Emitter Length mm	K1 UIN	K1 Heat output Watts	K1 Heat output Btu/hr	P+ UIN	P+ Heat output Watts	P+ Heat output Btu/hr	K2 UIN	K2 Heat output Watts	K2 Heat output Btu/hr
500*	650	300	400	142169	152	518	142217	217	740	142193	271	924
	850	300	600	142170	227	776	142218	325	1110	142194	405	1383
	1050	300	800	142171	304	1036	142219	434	1480	142195	541	1845
	1250	300	1000	142172	379	1294	142220	542	1850	142196	676	2307
	1450	300	1200	142173	455	1552	142221	651	2220	142197	812	2769
	1650	300	1400	142174	531	1812	142222	759	2590	142198	947	3231
	1850	300	1600	142175	607	2070	142223	868	2961	142199	1082	3690
	2050	300	1800	142176	683	2330	142224	976	3331	142200	1217	4152
650**	650	400	400	142177	197	674	142225	290	990	142201	341	1164
	850	400	600	142178	297	1013	142226	435	1483	142202	512	1748
	1050	400	800	142179	396	1350	142227	580	1978	142203	683	2330
	1250	400	1000	142180	494	1687	142228	725	2473	142204	853	2912
	1450	400	1200	142181	593	2024	142229	870	2968	142205	1024	3494
	1650	400	1400	142182	692	2361	142230	1015	3463	142206	1195	4076
	1850	400	1600	142183	791	2700	142231	1159	3956	142207	1365	4658
	2050	400	1800	142184	890	3037	142232	1305	4451	142208	1536	5242
750***	650	500	400	142185	251	858	142233	345	1177	142209	417	1424
	850	500	600	142186	376	1284	142234	518	1766	142210	626	2136
	1050	500	800	142187	502	1713	142235	690	2353	142211	835	2848
	1250	500	1000	142188	628	2141	142236	862	2943	142212	1043	3560
	1450	500	1200	142189	753	2570	142237	1035	3532	142213	1252	4272
	1650	500	1400	142190	879	2999	142238	1207	4119	142214	1461	4984
	1850	500	1600	142191	1004	3425	142239	1380	4709	142215	1670	5696
	2050	500	1800	142192	1129	3854	142240	1552	5296	142216	1878	6409

*500 integral kick grille **650 height includes 150mm removable kick grille ***750 height includes 150mm removable kick grille

Stelrad LST Range Plus

30 Δt (55/45/20°C)

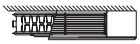

Casing Height	Casing Length mm	Emitter Height mm	Emitter Length mm	K1 UIN	K1 Watts	K1 Btu/hr	P+ UIN	P+ Watts	P+ Btu/hr	K2 UIN	K2 Watts	K2 Btu/hr
500*	650	300	400	142169	105	357	142217	149	510	142193	186	636
	850	300	600	142170	157	534	142218	224	764	142194	279	952
	1050	300	800	142171	209	713	142219	299	1019	142195	372	1270
	1250	300	1000	142172	261	891	142220	373	1274	142196	466	1588
	1450	300	1200	142173	313	1068	142221	448	1529	142197	559	1907
	1650	300	1400	142174	366	1248	142222	523	1784	142198	652	2225
	1850	300	1600	142175	418	1425	142223	597	2038	142199	745	2541
	2050	300	1800	142176	470	1604	142224	672	2293	142200	838	2859
650**	650	400	400	142177	136	464	142225	200	682	142201	235	801
	850	400	600	142178	204	698	142226	299	1021	142202	353	1204
	1050	400	800	142179	272	930	142227	399	1362	142203	470	1604
	1250	400	1000	142180	340	1161	142228	499	1703	142204	588	2005
	1450	400	1200	142181	408	1393	142229	599	2044	142205	705	2406
	1650	400	1400	142182	476	1625	142230	699	2384	142206	822	2806
	1850	400	1600	142183	545	1859	142231	798	2724	142207	940	3207
	2050	400	1800	142184	613	2091	142232	898	3065	142208	1058	3609
750***	650	500	400	142185	173	590	142233	237	810	142209	287	981
	850	500	600	142186	259	884	142234	356	1216	142210	431	1471
	1050	500	800	142187	346	1179	142235	475	1620	142211	575	1961
	1250	500	1000	142188	432	1474	142236	594	2026	142212	718	2451
	1450	500	1200	142189	519	1769	142237	713	2432	142213	862	2942
	1650	500	1400	142190	605	2065	142238	831	2836	142214	1006	3432
	1850	500	1600	142191	691	2358	142239	950	3242	142215	1149	3922
	2050	500	1800	142192	778	2653	142240	1069	3646	142216	1293	4412

*500 integral kick grille **650 height includes 150mm removable kick grille ***750 height includes 150mm removable kick grille

EN 442 Certification Data – BSRIA tested in accordance with BS EN 442

Type	K1			P+			K2		
Overall Height	500	650	750	500	650	750	500	650	750
Emitter Height	300	400	500	300	400	500	300	400	500
W/m at 80/60/20	507	661	839	727	969	1153	904	1141	1395
n-coefficients	1.26	1.35	1.32	1.32	1.32	1.34	1.31	1.34	1.36
Heated Surface Area (m^2/m)	2.09	2.95	3.80	2.44	3.37	4.31	3.51	4.92	6.33
Weight (kg/m)	9.31	12.78	16.24	14.29	19.46	24.63	16.18	22.87	28.93
Water Contents (l/m)	1.89	2.57	3.25	3.70	5.15	6.60	3.70	5.15	6.60

LST Plus wall fixings and bracket positions (height 650mm and 750mm)

All dimensions in mm. Inches in brackets.

Casing Length
650
850
1050

Casing Height
650
750

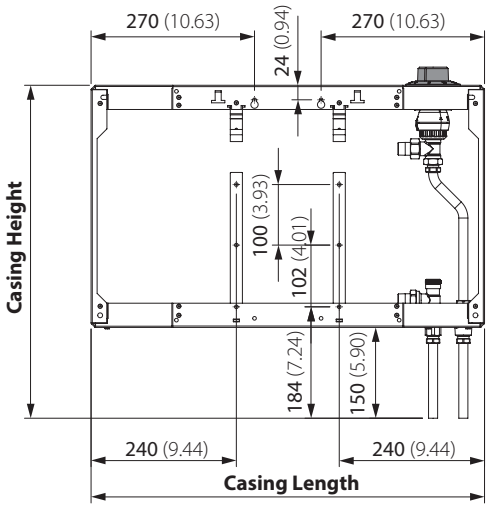

Casing Length	A	B
1250	415	445
1450	515	545

Casing Height
650
750

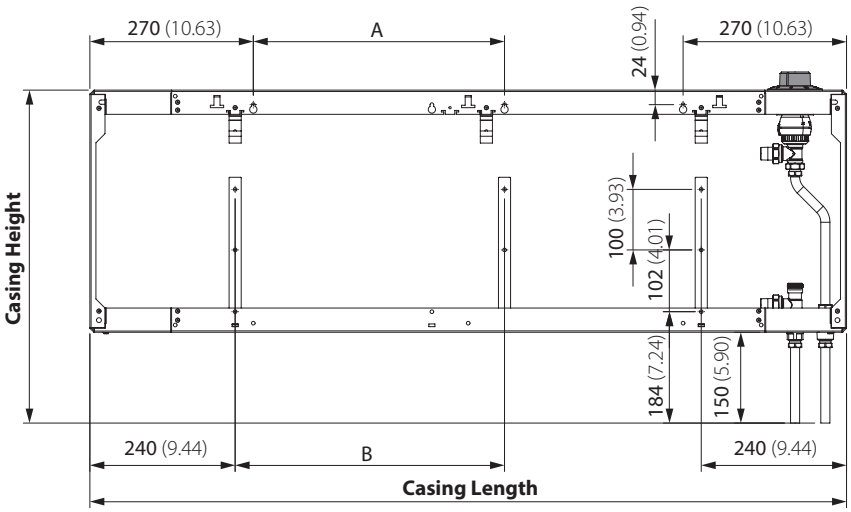

Casing Length
1650
1850
2050

Casing Height
650
750

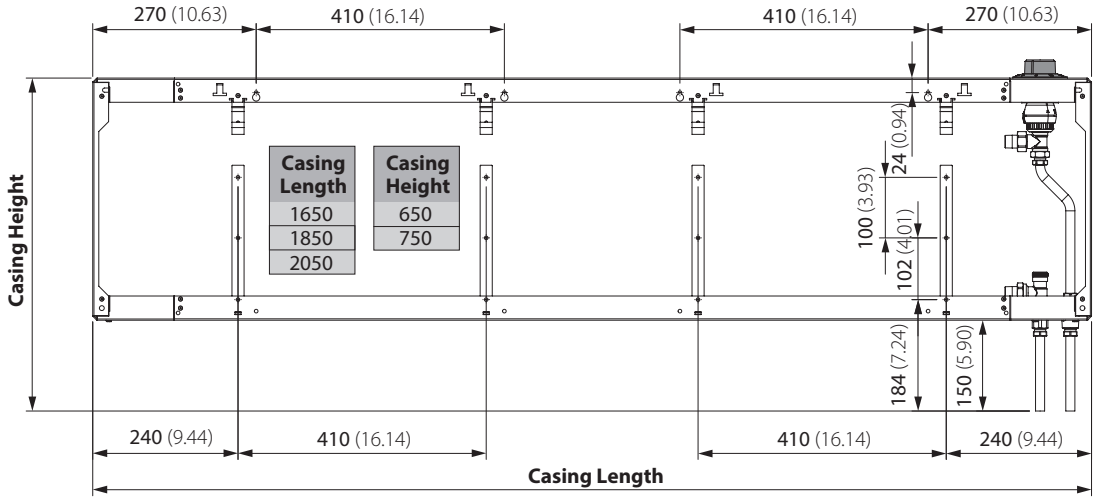

LST Plus floor mounting bracket positions (height 500mm)

All dimensions in mm. Inches in brackets.

Casing Length
650
850
1050

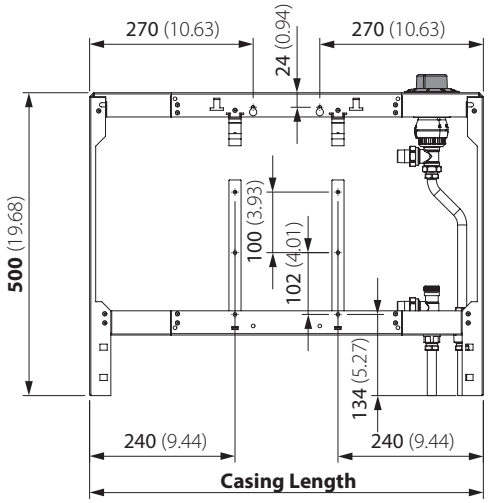

Casing Length	A	B
1250	415	445
1450	515	545

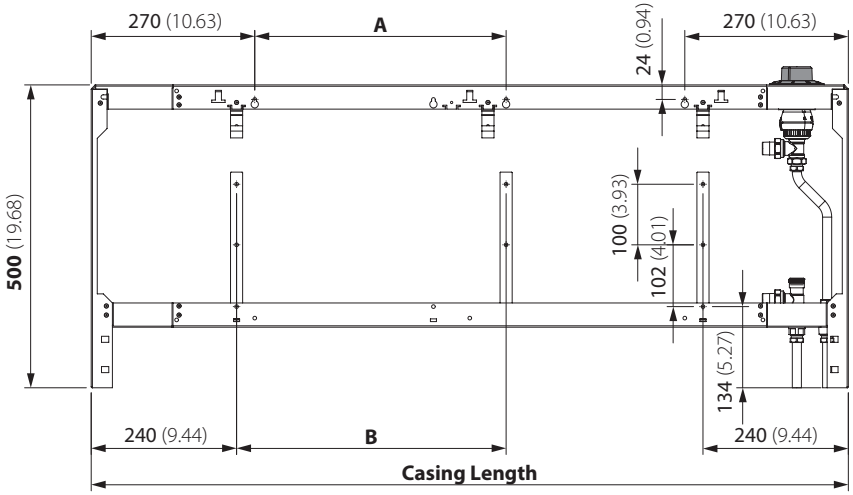

Casing Length
1650
1850
2050

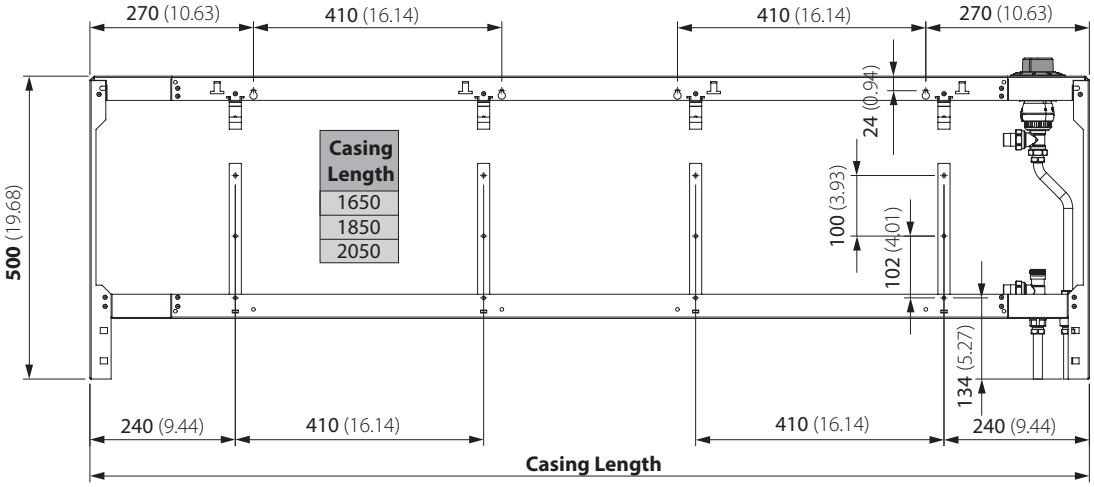

LST Plus connection options (height 650 and 750mm)

All dimensions in mm. Inches in brackets.

Control on right-hand side

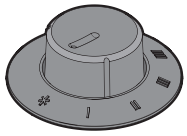

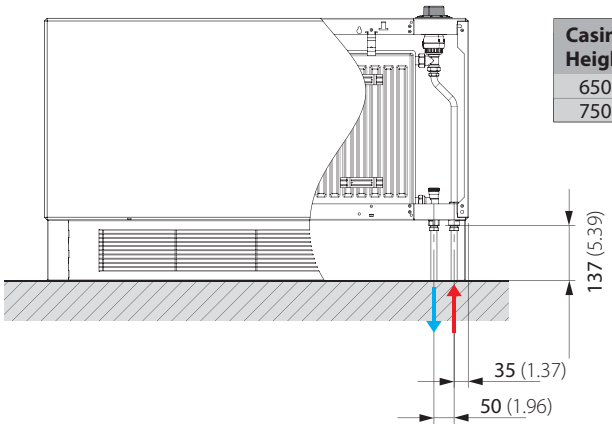

Casing Height	A
650	350
750	450

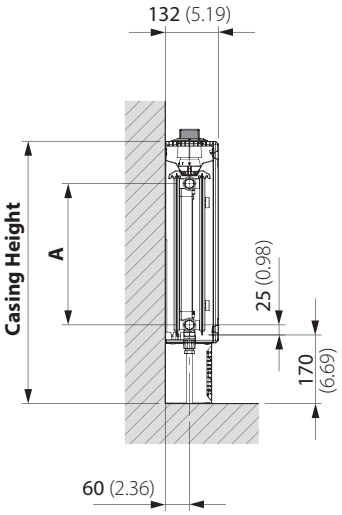

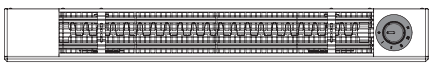

Control on left-hand side

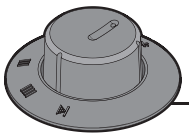

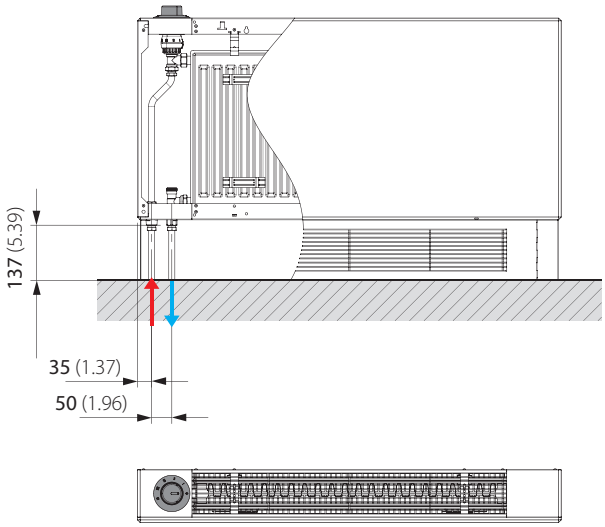

Pipe configurations

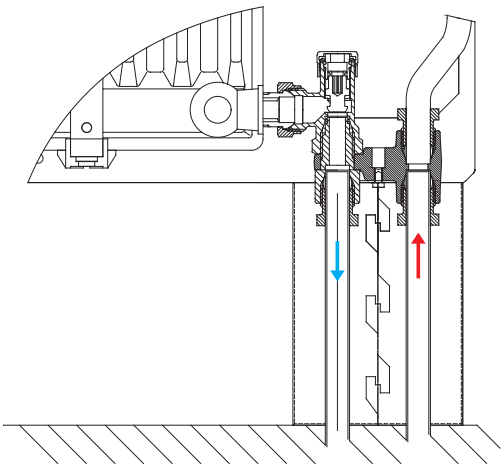

LST Plus connection options (height 500mm)

All dimensions in mm. Inches in brackets.

Control on right-hand side

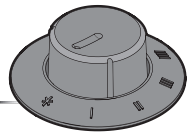

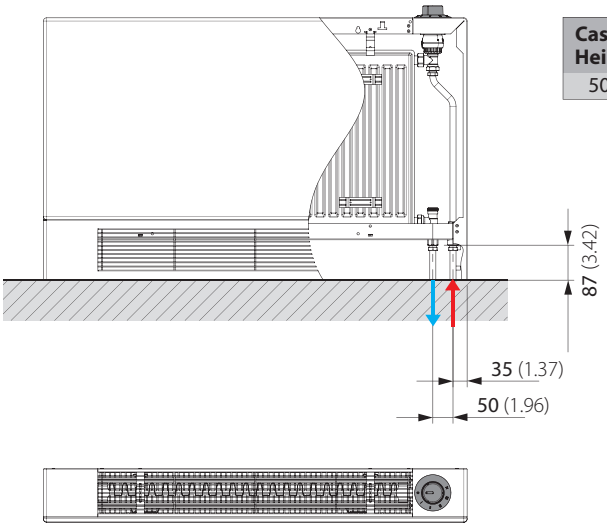

Casing Height	A
500	250

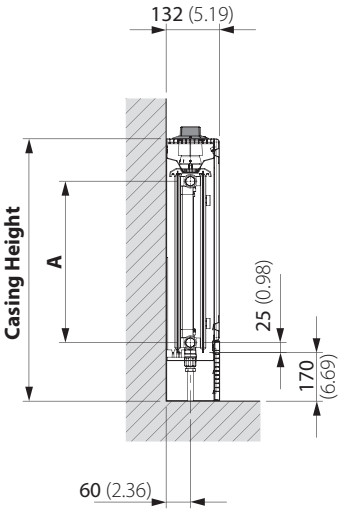

Control on left-hand side

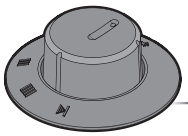

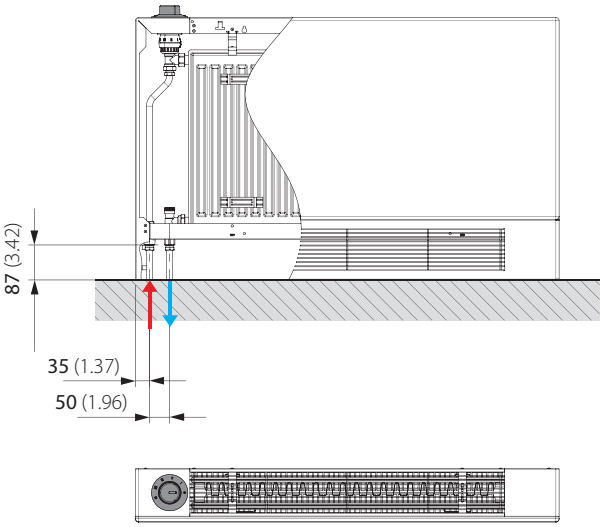

Stelrad LST Range i Plus

50 Δt (75/65/20°C)

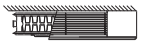

Casing Height	Casing Length mm	Emitter Height mm	Emitter Length mm	K1 UIN	K1 Heat output Watts	K1 Heat output Btu/hr	P+ UIN	P+ Heat output Watts	P+ Heat output Btu/hr	K2 UIN	K2 Heat output Watts	K2 Heat output Btu/hr
500	650	300	400	145200	196	669	145248	284	969	145224	348	1187
	850	300	600	145201	293	1000	145249	426	1454	145225	522	1781
	1050	300	800	145202	391	1334	145250	568	1938	145226	696	2375
	1250	300	1000	145203	489	1668	145251	710	2423	145227	870	2968
	1450	300	1200	145204	587	2003	145252	852	2907	145228	1044	3562
	1650	300	1400	145205	685	2337	145253	994	3392	145229	1218	4156
	1850	300	1600	145206	782	2668	145254	1136	3876	145230	1392	4750
	2050	300	1800	145207	880	3003	145255	1278	4361	145231	1566	5343
650	650	450	400	145208	290	989	145256	386	1317	145232	478	1631
	850	450	600	145209	435	1484	145257	580	1979	145233	717	2446
	1050	450	800	145210	580	1979	145258	773	2637	145234	956	3262
	1250	450	1000	145211	725	2474	145259	966	3296	145235	1195	4077
	1450	450	1200	145212	870	2968	145260	1159	3955	145236	1434	4893
	1650	450	1400	145213	1015	3463	145261	1352	4613	145237	1673	5708
	1850	450	1600	145214	1160	3958	145262	1546	5275	145238	1912	6524
	2050	450	1800	145215	1305	4453	145263	1739	5933	145239	2151	7341
800	650	600	400	145216	365	1245	145264	501	1709	145240	615	2098
	850	600	600	145217	548	1870	145265	751	2562	145241	922	3146
	1050	600	800	145218	730	2493	145266	1002	3419	145242	1230	4197
	1250	600	1000	145219	913	3115	145267	1252	4272	145243	1537	5244
	1450	600	1200	145220	1096	3740	145268	1502	5125	145244	1844	6295
	1650	600	1400	145221	1278	4361	145269	1753	5981	145245	2152	7343
	1850	600	1600	145222	1461	4985	145270	2003	6837	145246	2459	8393
	2050	600	1800	145223	1643	5606	145271	2254	7691	145247	2767	9441

Δt50 is the UK's industry standard for heating outputs, which has an operating temperature of 75/65/20°C if you have a low temperature heat source you may wish to consider Δt40 or Δt30 output (see your installer or system designer).

40 Δt (55/45/20°C)

Casing Height	Casing Length mm	Emitter Height mm	Emitter Length mm	K1 UIN	K1 Heat output Watts	K1 Heat output Btu/hr	P+ UIN	P+ Heat output Watts	P+ Heat output Btu/hr	K2 UIN	K2 Heat output Watts	K2 Heat output Btu/hr
500	650	300	400	145200	147	500	145248	212	725	145224	260	888
	850	300	600	145201	219	748	145249	319	1087	145225	390	1332
	1050	300	800	145202	292	998	145250	425	1450	145226	521	1776
	1250	300	1000	145203	366	1248	145251	531	1812	145227	651	2220
	1450	300	1200	145204	439	1498	145252	637	2174	145228	781	2664
	1650	300	1400	145205	512	1748	145253	744	2537	145229	911	3109
	1850	300	1600	145206	585	1996	145254	850	2899	145230	1041	3553
	2050	300	1800	145207	658	2246	145255	956	3262	145231	1171	3997
650	650	450	400	145208	217	740	145256	289	985	145232	358	1220
	850	450	600	145209	325	1110	145257	434	1480	145233	536	1830
	1050	450	800	145210	434	1480	145258	578	1973	145234	715	2440
	1250	450	1000	145211	542	1850	145259	723	2465	145235	894	3050
	1450	450	1200	145212	651	2220	145260	867	2958	145236	1073	3660
	1650	450	1400	145213	759	2590	145261	1011	3451	145237	1251	4270
	1850	450	1600	145214	868	2961	145262	1156	3946	145238	1430	4880
	2050	450	1800	145215	976	3331	145263	1301	4438	145239	1609	5490
800	650	600	400	145216	273	932	145264	375	1279	145240	460	1570
	850	600	600	145217	410	1399	145265	562	1917	145241	690	2353
	1050	600	800	145218	546	1863	145266	749	2557	145242	920	3139
	1250	600	1000	145219	683	2330	145267	936	3195	145243	1150	3923
	1450	600	1200	145220	820	2797	145268	1123	3833	145244	1379	4706
	1650	600	1400	145221	956	3262	145269	1311	4474	145245	1610	5492
	1850	600	1600	145222	1093	3729	145270	1498	5112	145246	1839	6276
	2050	600	1800	145223	1229	4193	145271	1686	5753	145247	2070	7062

Stelrad LST Range i Plus

30 Δt (55/45/20°C)

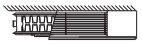

Casing Height	Casing Length mm	Emitter Height mm	Emitter Length mm	K1 UIN	K1 Heat output Watts	K1 Heat output Btu/hr	P+ UIN	P+ Heat output Watts	P+ Heat output Btu/hr	K2 UIN	K2 Heat output Watts	K2 Heat output Btu/hr
500	650	300	400	145200	101	344	145248	146	499	145224	179	611
	850	300	600	145201	151	515	145249	219	749	145225	269	917
	1050	300	800	145202	201	687	145250	293	998	145226	358	1223
	1250	300	1000	145203	252	859	145251	366	1248	145227	448	1529
	1450	300	1200	145204	302	1031	145252	439	1497	145228	538	1834
	1650	300	1400	145205	353	1204	145253	512	1747	145229	627	2140
	1850	300	1600	145206	403	1374	145254	585	1996	145230	717	2446
	2050	300	1800	145207	453	1546	145255	658	2246	145231	806	2752
650	650	450	400	145208	149	510	145256	199	678	145232	246	840
	850	450	600	145209	224	764	145257	299	1019	145233	369	1260
	1050	450	800	145210	299	1019	145258	398	1358	145234	492	1680
	1250	450	1000	145211	373	1274	145259	497	1697	145235	615	2100
	1450	450	1200	145212	448	1529	145260	597	2037	145236	739	2520
	1650	450	1400	145213	523	1784	145261	696	2376	145237	862	2940
	1850	450	1600	145214	597	2038	145262	796	2717	145238	985	3360
	2050	450	1800	145215	672	2293	145263	896	3056	145239	1108	3780
800	650	600	400	145216	188	641	145264	258	880	145240	317	1081
	850	600	600	145217	282	963	145265	387	1320	145241	475	1620
	1050	600	800	145218	376	1283	145266	516	1761	145242	633	2161
	1250	600	1000	145219	470	1604	145267	645	2200	145243	792	2701
	1450	600	1200	145220	564	1926	145268	774	2639	145244	950	3240
	1650	600	1400	145221	658	2246	145269	903	3080	145245	1108	3781
	1850	600	1600	145222	752	2567	145270	1032	3520	145246	1266	4321
	2050	600	1800	145223	846	2887	145271	1161	3961	145247	1425	4862

EN 442 Certification Data - CETIAT tested in accordance with BS EN442

Type	K1			P+			K2		
Casing Height	500	650	800	500	650	800	500	650	800
Emitter Height	300	450	600	300	450	600	300	450	600
W/m at 75/65/20	489	725	913	710	966	1252	870	1195	1537
n-coefficients	1.19	1.25	1.34	1.24	1.27	1.31	1.27	1.30	1.32
Heated Surface Area (m²/m)	2.09	3.37	4.66	2.44	3.84	5.24	3.51	5.62	7.74
Weight (kg/m)	17.80	23.50	29.40	22.70	30.72	38.40	24.40	33.30	42.50
Water Contents (l/m)	1.89	2.57	3.25	3.70	5.15	6.60	3.70	5.15	6.60

LST i Plus wall fixings and bracket positions

All dimensions in mm. Inches in brackets.

Casing Length	Casing Height
650	500
850	650
1050	800

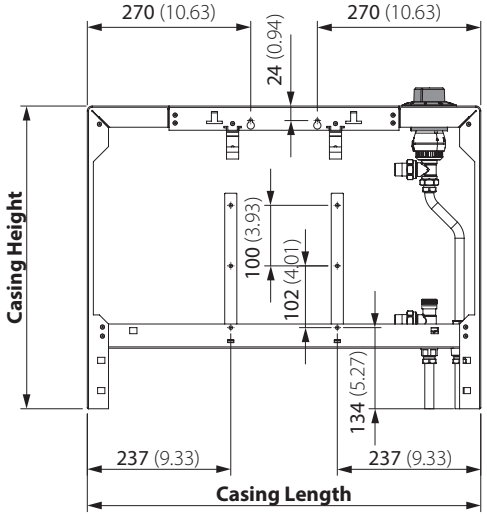

Casing Length	A	B
1250	415	448
1450	515	548
1650	615	648
1850	715	748
2050	815	848

Casing Height
500
650
800

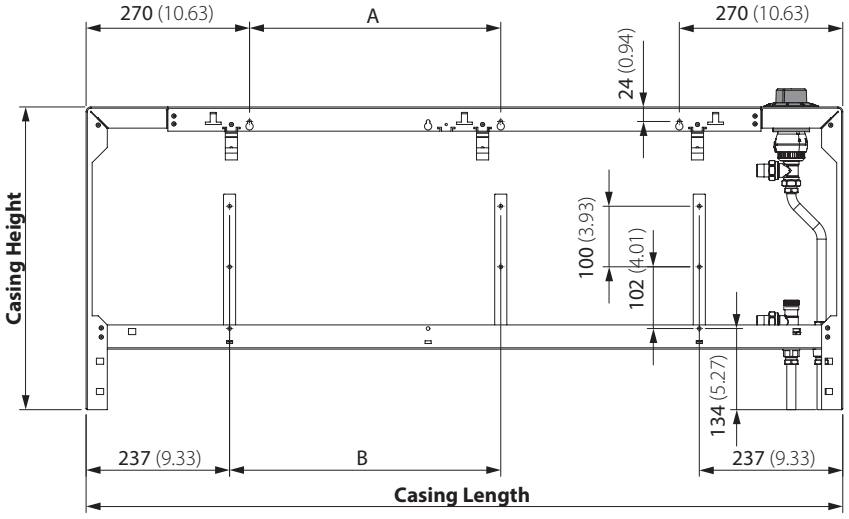

LST i Plus connection options

All dimensions in mm. Inches in brackets.

Control on right-hand side

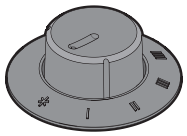

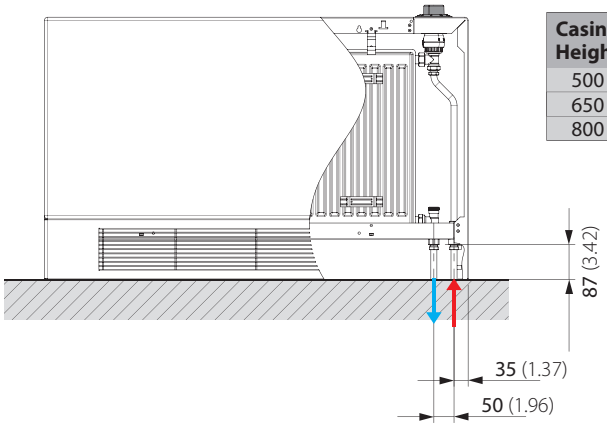

Casing Height	A
500	250
650	400
800	550

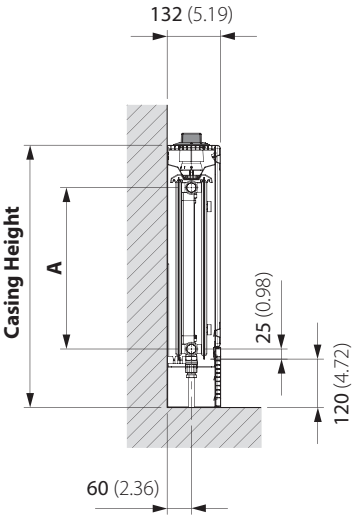

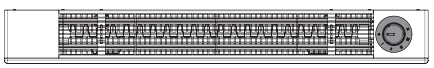

Control on left-hand side

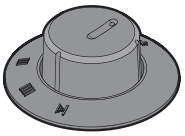

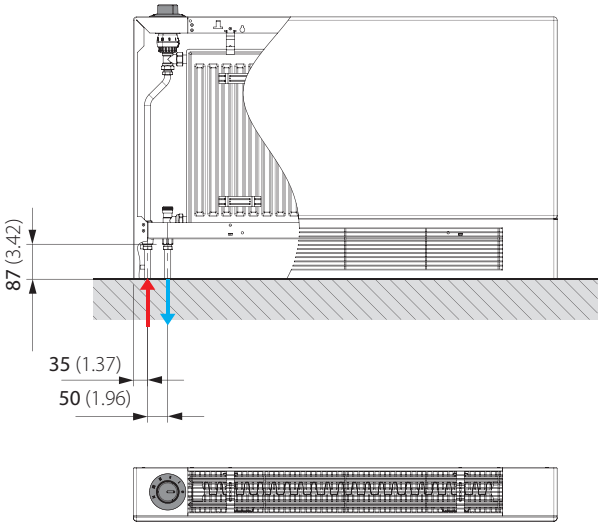

Pipe configurations

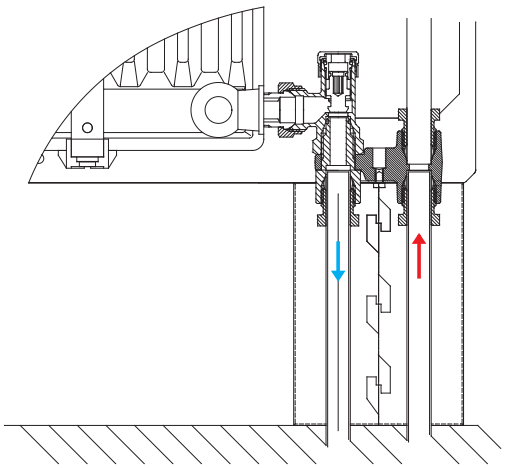

LST Range Components

LST Standard front case view.

LST Standard inside the casing showing the emitter.

LST Standard emitter, showing high level valve option (valve not included).

LST Standard circular knockout for TRV. Oblong knockout for pipe.

LST Plus front case view.

LST Plus inside the casing showing the emitter.

LST Vertical front case view.

LST i Plus front case view.

LST i Plus inside the casing showing the emitter.

LST Plus and LST i Plus Components

Optional cover cap to discourage unauthorised tampering.

An arthritic adaptor is supplied as standard for special needs environments.

Accommodated within the casing, the Stelrad LST Plus emitter, with TBSE valve arrangement and 2 x ½" BSP connections as standard.

Connection arrangement bottom.

Connection arrangement top.

Includes Danfoss RA-2000 TRV and copper pipe configuration.

The remote sensing thermostatic valve gives accuracy of operation and the limiting device is completely hidden to prevent the maximum temperature being exceeded.

STARS

STELRAD'S ADVANCED HEATLOSS CALCULATOR

The Stelrad STARS Heatloss Calculator contains an inbuilt U value calculator.

Save time and effort by using the Stelrad STARS program - the perfect solution for accurate sizing and design flexibility.

www.starsapp.co.uk

colourful

A shade for every room, for every interior. Opt for warm elegance, baroque ambience or modern minimalism.

Below colours for:
Caliente Towel Rail, Concord Towel Rail, Compact with Style, Planar and Swing

Natural Colours

NT110
Papyrus white

NT120
Pearl white

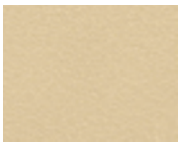
NT130
Champagne

NT140
Beige

NT150
Beige grey

NT160
Pebble grey

NT170
Quartz grey

SN110
Cream white

SN120
Cream

SN130
Mocca

SN140
Bordeaux

SN150
Sepia

SN160
Pale blue

SN170
Black

Metallic Colours

ML110
Dove grey

ML120
Titanium grey

ML130
Blue grey

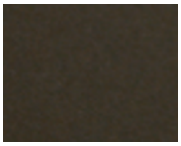
ML140
Granite

ML150
Cappuccino

ML160
Terra brown

ML170
Graphite black

RAL Colours

A1004
Golden yellow

A2003
Pastel orange

A3002
Carmine red

A3003
Robin red

A5002
Ultramarine blue

A6018
Yellow green

A7001
Silver grey

A7011
Iron grey

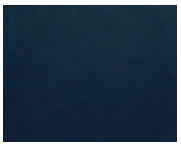
A7016
Anthracite grey

A7030
Stone grey

A7035
Light grey

A8017
Chocolate brown

A9003
Signal white

A9005
Jet black

Please note: When a coloured radiator or radiators over 2 metres have been ordered they cannot be cancelled or returned. All colour radiators have a 6 week lead time.

inspiration

With Stelrad, you can heat your home in colour. Choose from a full range of stylish radiator colours.

Below colours for:
Classic Column, Concord, Vistaline and Ellipse

RAL Colours

RAL 7035

RAL 7038

RAL 7036

RAL 7030

RAL 7037

RAL 7015

RAL 9005*

RAL 8017

RAL 1016

RAL 1021

RAL 1004

RAL 2008

RAL 3017****

RAL 3000

RAL 3003

RAL 3005

RAL 6027

RAL 6034

RAL 6019

RAL 6033

RAL 6020

RAL 6005

RAL 5014

RAL 5002

RAL 5024

RAL 5022

RAL 5010

RAL 9016**

RAL 9010

RAL 9001

RAL 1013

RAL 1015

RAL 9002

Metallic Colours

2765G Silver

BR 0004

BR 0007***

Stelrad radiators are available in white (RAL 9016) as standard, however the specific radiators identified are now available in a variety of colours. Please note that once ordered, coloured radiators cannot be cancelled.

The colours shown are reproduced as accurately as this process will allow and can be made to order on the identified products.

*Excel black **Standard white ***Colour for Arc, Wave and Optia
****Not available for Classic Column

To request a colour chart and details of how to order please email marketing@stelrad.com

Glossary

Btu/hr	British Thermal Unit per hour is the standard measurement used to state the amount of output of any heat generating device.
Watts	Is another measurement for heat output, 1 watt is equivalent to 3.412 Btu/hr.
P1	Also known as Type 10, is a type of radiator with 1 radiator panel and no convection fins.
K1	Also known as Type 11, is a type of radiator with 1 radiator panel and 1 set of convection fins.
P+	Also known as Type 21, is a type of radiator with 2 radiator panels and 1 set of convection fins.
K2	Also known as Type 22, is a type of radiator with 2 radiator panels and 2 sets of convection fins.
K3	Also known as Type 33, is a type of radiator with 3 radiator panels and 3 sets of convection fins.
Δt	Refers to the difference in temperature between the water circulating in the central heating system and that of the ambient temperature. It is important to use the correct Δt when selecting your radiators, as the same radiator will have different outputs at different water temperatures.
Δt50	Δt50 is the UK standard, however Stelrad also quote at lower levels for lower water temperature systems.
Heat loss	Is the amount of heat a room loses, it is therefore an important calculation when determining what size radiator is required to heat a room to the correct level.
UIN	Is the Stelrad product identification code.
Warranty	The warranty covers any defect that is attributable to a manufacturing, assembly or material fault, further details available on request.
ISO14001	Is a set of International regulations related to the environment.
ISO9001	Is a set of International regulations related to quality management systems.
OHSAS18001	Is a set of International regulations related to health and safety.
TBOE / BOE	Refers to which position the pipes are connected to the radiator, OE means opposite end i.e. 1 pipe on each side, TB is top bottom i.e. 1 pipe is connected to the top and 1 to the bottom, B is both pipes connected to the bottom.

CETIAT tested	A leading independent French laboratory which conducts testing and assessments.
EN 442	EN 442 is the European standard which defines the manufacturing standards for radiators and convectors which operate at temperatures of less than 120°C. The standard defines the type of steel which must be used, the type of pressure testing which must be carried out and the accuracy of the heat outputs quoted in the literature.
STARS	The Stelrad Technically Advanced Radiator System heatloss calculator, offers an even simpler way to get sizing of radiators right, first time. Visit www.starsapp.co.uk
KIWA	KIWA Ltd is an energy consultancy, Notified Body, UKAS-accredited testing lab and training centre with expertise in gas, oil, solid fuel, biomass and other renewables, construction materials, water and electricity.
CPD	Continuing Professional Development. CIBSE (Chartered Institute of British Service Engineers) and RIBA (Royal Institute of British Architects) CPD approved courses available.
BIM	Business Information Modelling (components). Visit www.stelrad.com to download BIM components.
RAL	A European wide colour matching system.
BSP	British Standard Piping.

Corporate Social Responsibility (CSR)

Stelrad Limited are part of the Ideal Stelrad Group. The company recognises that its success is built on integrating business values and operations to meet the expectations of stakeholders. Stelrad's social, economic and environmental responsibilities are to these stakeholders, which are demonstrated throughout its business practises, policies and achievements.

Stelrad are committed to Integrated Management Systems for control of Quality, Health and Safety and Environment, which are certificated to BSI OHSAS / ISO standards.

Wherever possible, Stelrad sources renewable and recyclable materials. 100% of all metal and other raw materials throughout the manufacturing process are recycled.

A full CSR policy document is available on request.

Design service

We offer developers and specifiers a comprehensive heating system design service.

Please contact us on 0191 261 5106.

Heat outputs stated at 30°C and 40°C are based on a standard n-coefficient of 1.3.

Whilst every effort is made to provide accurate information, we reserve the right to change specifications and availability without prior notice.

We have it covered

2 year warranty on all commercial condensing boilers

EVOMAX

30 - 150 kW
- Wall hung
- Robust and light aluminium silicon alloy heat exchanger
- Up to 110% part load efficiency
- High 5:1 turndown
- Low NOx emissions <40mg/kWh for all natural gas models
- Quality product through design, component selection and proving
- LPG models 30 - 80 kW
- Built in hours run and frost protection
- Simple controls interface with large backlit display
- Optional frame and header kits
- Compact for easy installation
- Remote indication and 0-10 volt operation standard
- ECA listed

IMAX XTRA

80 - 560 kW
- Floor standing
- Robust and light aluminium silicon alloy heat exchanger
- In-built commissioning and fault diagnostics
- Low NOx emissions <40mg/kWh
- Compact size – small footprint
- High 5:1 turndown
- Up to 107.5% net efficiency (fully condensing)
- Fits through standard doorways
- Remote indication and 0-10 volt operation standard
- ECA listed

EVOMOD

250 - 1000 kW
- Floor standing
- Stainless steel heat exchanger
- Modular boiler benefits:
  - Heat maintained during service
  - Easier installation as lighter, smaller parts
- High modulation & close load matching (5:1 up to 20:1)
- Low NOx emissions (<40mg/kWh)
- Module sequencing as standard
- Single flue, system gas & electrical connections
- Quality product through design, component selection and proving
- Compact & minimum floor area
- Assembled & site assembly capability
- Remote indication and 0-10 volt operation standard
- ECA listed

For more information contact Ideal Commercial Heating: T: 01482 492251 E: enquiries@idealheating.com

BEST OF BRITISH

WWW.IDEALCOMMERCIALHEATING.COM

Stelrad®

Leading the way

Follow us on:

@stelrad

facebook.com/
stelradradiators

pinterest.com/
stelrad

Stelrad Limited Stelrad House Marriott Road
Mexborough South Yorkshire S64 8BN

www.stelrad.com
Telephone: 0844 543 6200

TRB/10K/0215